This drawing is a "COPYRIGHT" contents of this drawing or part thereof may not be used or reproduced without the permission of the Architect.

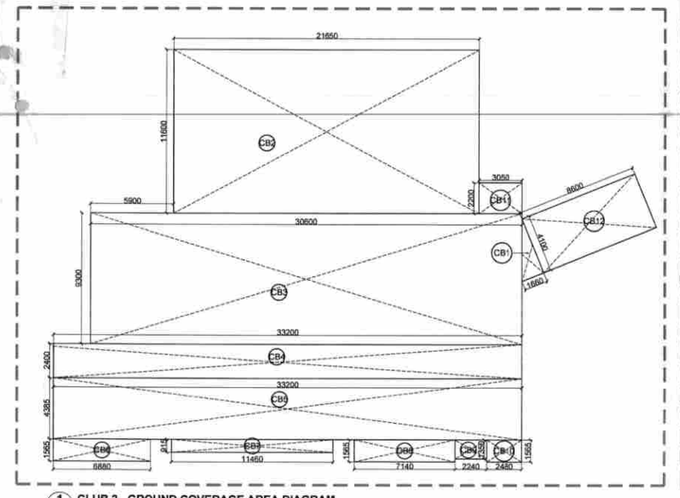

1 CLUB 2- GROUND COVERAGE AREA DIAGRAM
1:200

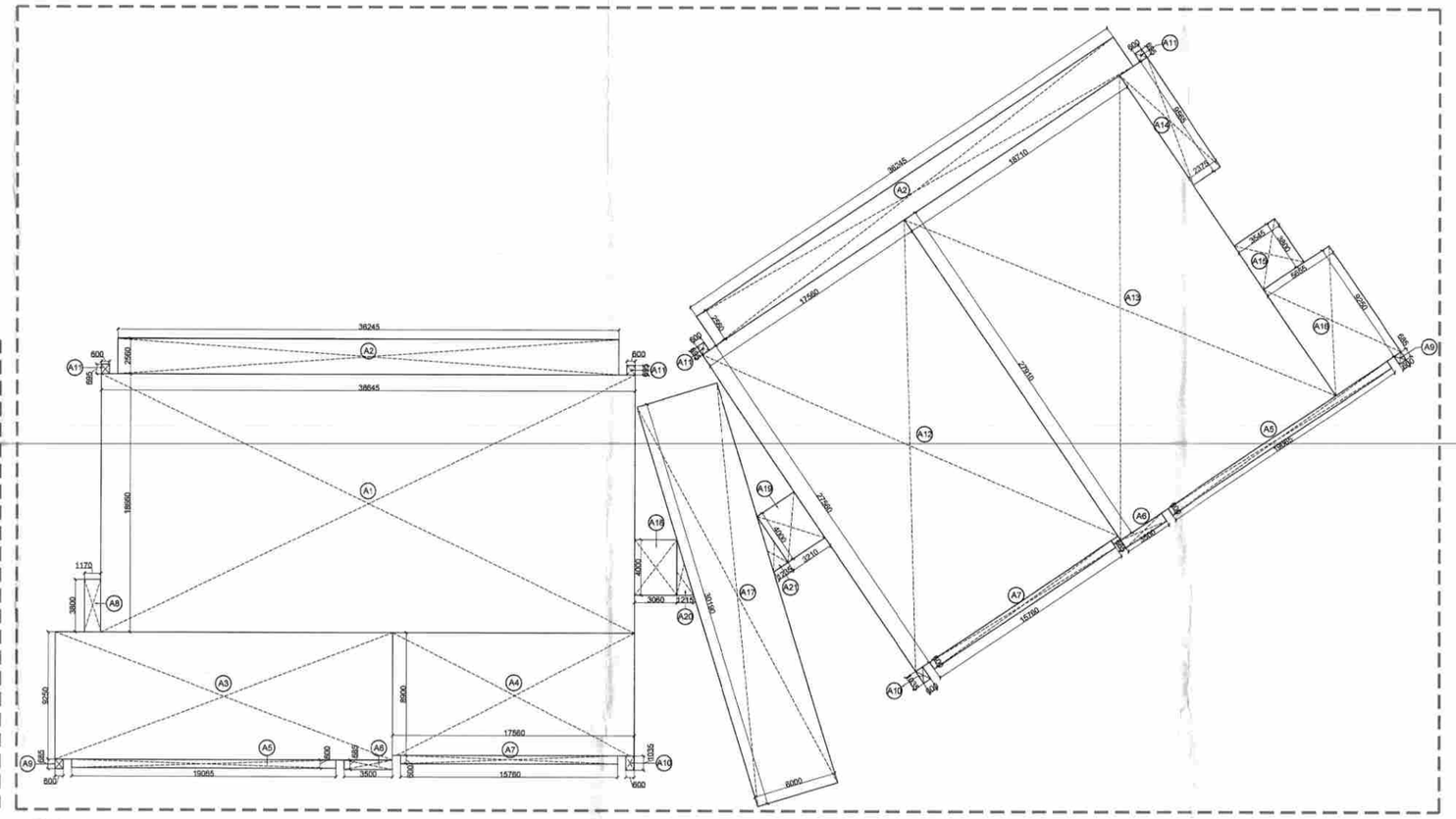

2 CLUB 1- GROUND COVERAGE AREA DIAGRAM
1:200

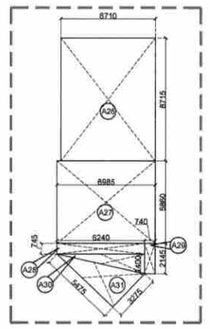

3 SERVICES AREA DIAGRAM- SITE 1 (G.C)
1:200

4 SERVICES AREA DIAGRAM- SITE 1 (G.C)
1:200

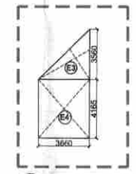

5 SERVICES AREA DIAGRAM-SITE 2 (G.C)
1:200

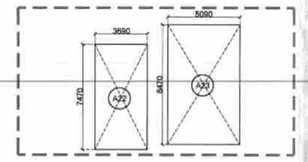

6 NT STAIRCASE-SITE 1 (G.C)
1:200

7 GUARD ROOM-SITE 1 (G.C)
1:200

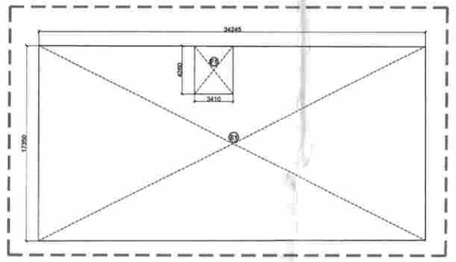

8 GROUND COVERAGE (EWS+CONVENIENT SHOPPING)-SITE 2-
1:250

CLUB 1- GROUND COVERAGE AREA						
GROSS ADDITIONS CLUB 1:(B)						
DESCRIPTION		LENGTH (m)	BREADTH (m)	AREA (sqm)	NO. OF FIGURES	TOTAL AREA (sqm)
Area of rectangle	A1	38.645	18.660	721.116	1	721.116
Area of rectangle	A2	36.245	2.560	92.787	2	185.574
Area of rectangle	A3	19.065	9.250	176.351	1	176.351
Area of rectangle	A4	17.560	8.900	156.284	1	156.284
Area of rectangle	A5	19.065	0.600	11.439	2	22.878
Area of rectangle	A6	3.500	0.685	2.398	2	4.795
Area of rectangle	A7	15.760	0.600	9.456	2	18.912
Area of rectangle	A8	1.170	3.800	4.446	1	4.446
Area of rectangle	A9	0.600	0.685	0.411	2	0.822
Area of rectangle	A10	0.600	1.035	0.621	2	1.242
Area of rectangle	A11	0.600	0.695	0.417	4	1.668
Area of rectangle	A12	17.560	27.560	483.954	1	483.954
Area of rectangle	A13	18.710	27.910	522.196	1	522.196
Area of rectangle	A14	2.375	9.565	22.717	1	22.717
Area of rectangle	A15	3.545	3.800	13.471	1	13.471
Area of rectangle	A16	5.655	9.250	52.309	1	52.309
Area of rectangle	A17	6.000	30.190	181.140	1	181.140
Area of rectangle	A18	3.060	4.000	12.240	1	12.240
Area of rectangle	A19	3.210	4.000	12.840	1	12.840
Area of triangle	A20	1.215	4.000	2.430	1	2.430
Area of triangle	A21	1.235	4.000	2.470	1	2.470
TOTAL OF ALL GROSS ADDITIONS 'B'						2599.85
TOTAL GROUND COVERAGE AREA(CLUB) = A+B						3445.54

CLUB 2- GROUND COVERAGE AREA						
GROSS ADDITIONS:(A)						
DESCRIPTION		LENGTH (m)	BREADTH (m)	AREA (sqm)	NO. OF FIGURES	TOTAL AREA (sqm)
Area of triangle	CB1	1.660	4.100	3.403	1	3.403
Area of rectangle	CB2	21.650	11.600	251.140	1	251.140
Area of rectangle	CB3	30.600	9.300	284.580	1	284.580
Area of rectangle	CB4	33.200	2.400	79.680	1	79.680
Area of rectangle	CB5	33.200	4.385	145.582	1	145.582
Area of rectangle	CB6	6.880	1.565	10.767	1	10.767
Area of rectangle	CB7	11.460	0.915	10.486	1	10.486
Area of rectangle	CB8	7.140	1.565	11.174	1	11.174
Area of rectangle	CB9	2.240	1.350	3.024	1	3.024
Area of rectangle	CB10	2.480	1.565	3.881	1	3.881
Area of rectangle	CB11	3.050	2.200	6.710	1	6.710
Area of rectangle	CB12	8.600	4.100	35.260	1	35.260
TOTAL OF ALL GROSS ADDITIONS 'A'						845.69
TOTAL GROUND COVERAGE OF CLUB 2 = A						845.69

EWS-GROUND COVERAGE (G)						
GROSS ADDITIONS(E1)						
DESCRIPTION		LENGTH (m)	BREADTH (m)	AREA (sqm)	NO. OF FIGURES	TOTAL AREA (sqm)
Area of rectangle	E1	34.245	17.500	599.288	1	599.288
					TOTAL	599.288
GROSS DEDUCTION(F1)						
DESCRIPTION		LENGTH (m)	BREADTH (m)	AREA (sqm)	NO. OF FIGURES	TOTAL AREA (sqm)
Area of rectangle	F1	3.410	4.410	15.038	1	15.038
					TOTAL	15.038
TOTAL GROUND COVERAGE=(G= E1-F1)						584.249

SITE LEVEL Ground Coverage (Plot 1+Plot 2)						
GROSS ADDITIONS						
DESCRIPTION		LENGTH (m)	BREADTH (m)	AREA (sqm)	NO. OF FIGURES	TOTAL AREA (sqm)
Area of rectangle	A22	3.690	7.470	27.564	1	27.564
Area of rectangle	A23	5.090	8.470	43.112	1	43.112
Area of rectangle	A24	2.000	1.500	3.000	3	9.000
Area of rectangle	A25	6.715	3.610	24.241	1	24.241
Area of rectangle	A26	6.710	8.715	58.478	1	58.478
Area of rectangle	A27	6.985	5.860	40.932	1	40.932
Area of rectangle	A28	6.240	0.745	4.649	1	4.649
Area of rectangle	A29	0.740	2.145	1.587	1	1.587
Area of triangle	A30	1.400	6.240	4.368	1	4.368
Area of triangle	A31	5.475	3.275	8.965	1	8.965
TOTAL OF ALL GROSS ADDITIONS (SITE LEVEL FAR)						222.90

CLUB AREA STATEMENT			
S.No.	DESCRIPTION	TOTAL AREA	
		FAR (SQM)	NON FAR (SQM)
1	GROUND FLOOR (CLUB-1)	856.724	1743.131
CLUB 2			
2	GROUND FLOOR (CLUB-2)	760.485	
3	1st FLOOR	267.233	204.175
4	2nd FLOOR	112.219	170.587
5	OHT	-	40.936
TOTAL AREA		1996.661	2158.829

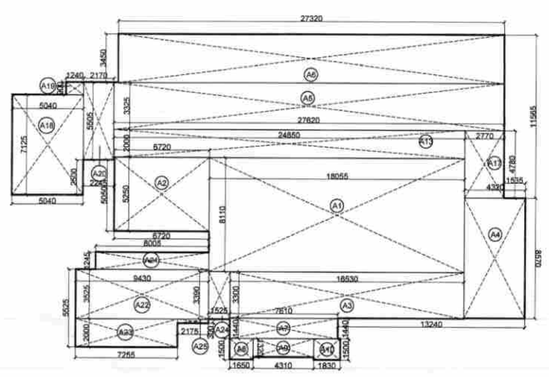

9 CLUB 1- GROUND FLOOR - FAR AREA DIAGRAM
1:200

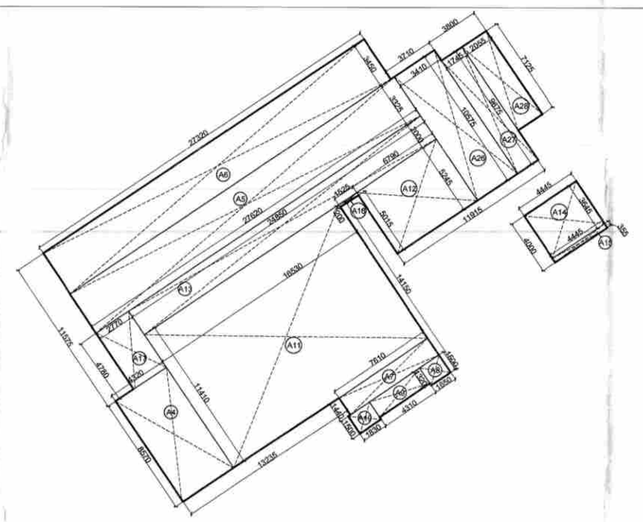

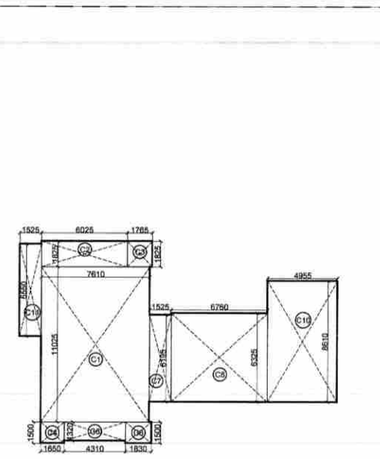

10 CLUB 1- CORE - FAR AREA DIAGRAM
1:200

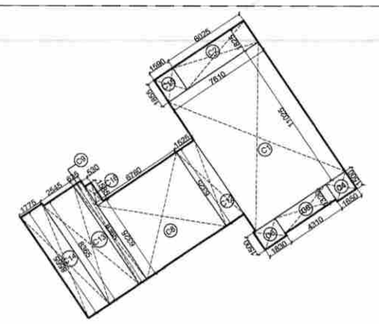

CLUB 1- GROUND FLOOR FAR AREA						
GROSS ADDITIONS CLUB 1:(A)						
DESCRIPTION		LENGTH (m)	BREADTH (m)	AREA (sqm)	NO. OF FIGURES	TOTAL AREA (sqm)
Area of rectangle	A1	18.055	8.110	146.426	1	146.426
Area of rectangle	A2	6.720	5.250	35.280	1	35.280
Area of rectangle	A3	16.530	3.300	54.549	1	54.549
Area of rectangle	A4	4.320	8.570	37.022	2	74.045
Area of rectangle	A5	27.620	3.325	91.837	2	183.673
Area of rectangle	A6	27.320	3.450	94.254	2	188.508
Area of rectangle	A7	7.610	1.440	10.958	2	21.917
Area of rectangle	A8	1.650	1.500	2.475	2	4.950
Area of rectangle	A9	4.310	1.320	5.689	2	11.378
Area of rectangle	A10	1.830	1.500	2.745	2	5.490
Area of rectangle	A11	16.530	11.410	188.607	1	188.607
Area of rectangle	A12	6.790	5.250	35.648	1	35.648
Area of rectangle	A13	24.850	2.000	49.700	2	99.400
Area of rectangle	A14	4.445	3.645	16.202	1	16.202
Area of rectangle	A15	4.445	0.355	1.578	1	1.578
Area of rectangle	A16	1.525	0.200	0.305	1	0.305
Area of rectangle	A17	2.770	4.780	13.241	2	26.481
Area of rectangle	A18	5.040	7.125	35.910	1	35.910
Area of rectangle	A19	1.240	0.900	1.116	1	1.116
Area of rectangle	A20	2.170	5.505	11.946	1	11.946
Area of rectangle	A21	8.005	1.245	9.966	1	9.966
Area of rectangle	A22	9.430	3.525	33.241	1	33.241
Area of rectangle	A23	7.255	2.000	14.510	1	14.510
Area of rectangle	A24	1.525	3.390	5.170	1	5.170
Area of rectangle	A25	2.175	0.300	0.653	1	0.653
Area of rectangle	A26	3.410	10.575	36.061	1	36.061
Area of rectangle	A27	1.745	9.675	16.883	1	16.883
Area of rectangle	A28	2.055	7.125	14.642	1	14.642
TOTAL OF ALL GROSS ADDITIONS 'A'						1274.53
GROSS ADDITIONS TOWER A& BCORE:(B)						
DESCRIPTION		LENGTH (m)	BREADTH (m)	AREA (sqm)	NO. OF FIGURES	TOTAL AREA (sqm)
Area of rectangle	C1	7.610	11.025	83.900	2	167.801
Area of rectangle	C2	6.025	1.825	10.996	2	21.991
Area of rectangle	C3	1.765	1.825	3.221	1	3.221
Area of rectangle	C4	1.650	1.500	2.475	2	4.950
Area of rectangle	C5	4.310	1.320	5.689	2	11.378
Area of rectangle	C6	1.830	1.500	2.745	2	5.490
Area of rectangle	C7	1.525	6.195	9.447	1	9.447
Area of rectangle	C8	6.760	6.325	42.757	2	85.514
Area of rectangle	C9	0.635	8.565	5.439	1	5.439
Area of rectangle	C10	4.955	8.610	42.663	1	42.663
Area of rectangle	C11	1.525	6.550	9.989	1	9.989
Area of rectangle	C12	1.525	6.325	9.646	1	9.646
Area of rectangle	C13	2.545	8.365	21.289	1	21.289
Area of rectangle	C14	1.775	8.565	15.203	1	15.203
Area of rectangle	C15	1.590	1.855	2.949	1	2.949
Area of rectangle	C16	0.530	1.585	0.840	1	0.840
TOTAL OF ALL GROSS ADDITIONS 'B'						417.81
TOTAL FAR AREA OF CLUB-1 GROUND FLOOR= A-B						856.72
TOTAL BUILT UP AREA OF CLUB-1 GROUND FLOOR= A						2599.85

S.T.P.(C) Member/Secretary B.P.A.C. | A.T.P.(C) Member B.P.A.C. | CCP(HQ) Chairman B.P.A.C. | FSO (HQ) Member BPAC | DTP(HQ) | ATP(HQ) | AD | ATP | Rajesh Dutt SD(HQ)

SANCTIONED
TO BE READ WITH THIS OFFICE MEMO NO.: 2463-
DATED: 20/11/2026

OWNER SIGN

ARCHITECT SIGN
REEMA SHARMA
B.ARCH
CA/2016/77247

KEY PLAN

SUBMISSION DRAWING

OWNER
M/S RADHEY BUILDHOME PVT. LTD. IN COLLABORATION WITH M/S ADANI M2K REALTORS LLP.

PROJECT
PROPOSED RESIDENTIAL GROUP HOUSING COLONY OVER AN ADDITIONAL AREA MEASURING 0.03125 ACRE (LICENSE NO 131 OF 2025 DATED 29-07-2025) ADJOINING TO ALREADY LICENCED AREA MEASURING 5.13125 ACRES (AFTER MIGRATION OF 12.85625 ACRES INTO RESIDENTIAL PLOTTED COLONY UNDER DDJAY-2016 LICENSE NO-44OF 2021 DATED 12.08.2021 OUT OF TOTAL 17.9875 ACRES UNDER LICENCE NO. 24 OF 2012) TOTAL AREA MEASURING 5.1625 ACRES IN SECTOR 102 & 102-A, GURUGRAM

SCALE: AS MARKED | DATE: 17.11.2026

DRAWING TITLE
GROUND COVERAGE & F.A.R. DETAILS (Ground Floor)

ARCHITECTS
MORPHOGENESIS.
41, INDUSTRIAL ESTATE, OKHLA PHASE-III,
NEW DELHI 110020, INDIA
TEL: +91 11 41828070
E MAIL: STUDIO@MORPHOGENESIS.ORG

DRAWING NO. S-09 | REVISION