06-A

BASEMENT-02 FLOOR AREA CALCULATIONS					
S. No.	OEFFICIEN	WIDTH	LENGTH	NOS.	AREA IN SQMT
ADDITIONS (A)					
A1	1	63.600	70.650	1	4493.340
A2	0.5	72.865	93.300	1	3399.152
A3	1	56.980	21.770	1	1240.455
A4	1	44.930	17.580	1	789.869
A5	1	44.680	35.390	1	1581.225
A6	1	59.295	72.865	1	4664.745
A7	1	44.880	49.610	1	2226.497
A8	0.5	74.170	94.975	1	3522.148
A9	1	67.420	24.340	1	1641.003
A10	1	5.115	13.005	1	66.521
A11	0.5	48.660	62.310	1	1516.002
A12	1	6.440	35.655	1	229.618
A13	1	1.845	42.770	1	78.911
A14	0.5	21.770	42.770	1	465.551
A15	0.5	15.015	29.505	1	221.509
A16	1	14.265	29.505	1	420.889
A17	0.5	45.040	105.325	1	2371.919
A18	1	28.280	105.325	1	3083.916
A19	0.5	59.925	68.690	1	2051.792
A20	0.5	24.330	22.130	1	269.211
A21	1	24.330	21.560	1	524.555
A22	0.5	22.840	21.560	1	246.215
A23	1	3.275	0.670	1	1.539
A24	1	121.455	33.020	1	4010.444
A25	1	54.405	43.160	1	2348.120
A26	1	7.105	15.020	1	106.717
A27	1	52.055	29.230	1	1521.568
A28	0.5	11.595	29.230	1	338.691
TOTAL ADDITION (A)				=	42292.122
DEDUCTIONS (D)					
D1	1	5.950	49.510	1	294.585
D2	1	6.950	31.080	1	216.076
D3	1	1.260	2.645	1	3.333
D4	0.5	2.645	5.680	1	7.525
TOTAL DEDUCTIONS AREA (D)					521.518
TOTAL BASEMENT AREA (A-D) = (B)					41770.604
SERVICES (S)					
S1	1	4.590	5.000	20	459.000
S2	1	3.550	6.250	3	66.563
S3	1	3.550	6.450	3	68.693
S4	1	0.600	1.500	6	5.400
S5	1	0.800	0.200	1	0.160
S6	1	4.700	27.000	5	634.500
S7	1	1.300	0.690	1	0.897
S8	1	4.250	6.635	1	28.199
S9	1	1.020	1.775	1	1.811
S10	1	1.600	7.240	1	11.584
S11	1	11.060	9.015	1	99.706
S12	1	5.490	1.975	1	10.843
S13	1	7.750	3.900	1	30.225
S14	1	1.500	0.400	1	0.600
S15	1	6.250	3.350	1	20.938
S16	1	4.095	5.600	1	22.932
S17	1	1.020	1.775	1	1.811
S18	1	0.200	4.370	1	0.874
S19	1	4.800	4.590	1	22.032
S20	1	4.250	6.625	1	28.156
S21	1	1.350	0.700	1	0.945
S22	1	13.925	26.415	1	367.829
S23	1	17.950	7.240	1	129.958
S24	1	8.800	1.775	1	15.620
S25	1	7.750	5.675	1	43.981
S26	1	6.700	9.000	1	42.300
S27	1	5.825	9.130	1	53.156
S28	1	9.385	16.950	1	159.076
S29	1	17.415	16.650	1	289.960
S30	1	16.400	8.620	1	141.368
S31	1	4.910	7.050	1	34.616
S32	1	20.800	18.985	1	374.788
S33	0.5	1.155	2.365	1	1.366
S34	1	11.390	2.365	1	26.937
S35	0.5	8.895	11.390	1	50.657
S36	1	14.260	11.260	1	160.568
S37	1	4.590	3.300	1	34.229
S38	1	1.695	2.870	1	4.865
S39	0.5	1.695	0.650	1	0.551
S40	0.5	3.670	2.870	1	5.266
S41	1	5.355	1.725	1	9.237
S42	1	4.740	5.760	1	28.885
S43	1	4.675	5.000	1	23.375
S44	1	3.705	5.950	1	22.045
S45	1	0.600	1.500	1	0.900
S46	1	4.030	3.050	1	12.292
S47	1	11.430	9.470	1	108.147
S48	1	6.345	6.770	1	42.956
S49	1	0.600	1.500	1	0.900
S50	1	1.615	2.325	1	3.755
S51	1	1.620	0.600	1	0.972
S52	1	4.785	2.385	1	11.412
S53	1	6.770	15.725	1	106.458
S54	1	5.160	18.265	1	118.672
S55	1	18.170	35.145	1	638.585
S56	1	21.760	2.410	1	52.498
S57	1	2.380	14.500	1	34.510
S58	1	1.500	0.600	1	0.900
S59	1	6.570	2.990	1	19.644
S60	1	10.115	12.770	1	129.169
S61	1	1.370	0.900	1	0.822
S62	1	10.660	15.155	1	161.552
S63	1	2.910	16.085	1	46.807
S64	1	0.695	16.645	1	11.568
S65	1	30.380	29.095	1	883.906
S66	1	12.240	3.385	1	41.432
S67	1	2.500	0.600	1	0.900
S68	1	10.195	3.385	1	34.510
S69	0.5	8.620	18.525	1	79.843
S70	1	8.620	13.955	1	120.292
S71	1	4.700	14.440	1	67.862
S72	1	15.370	4.700	1	72.239
S73	1	4.590	4.800	1	22.032
S74	1	AS PLAN		1	3.800
S75	1	4.100	5.000	1	20.500
S76	1	9.580	5.000	1	47.900
S77	1	9.490	4.850	1	46.027
S78	0.5	11.390	24.490	1	139.471
S79	1	24.490	14.185	1	347.391
TOTAL SERVICEFS (S)				=	6941.932
TOTAL PARKING AREA (B-S) = (P)				=	34828.672
AREA REQUIRED @32.5QM PER ECS				=	1088.396
SAY				=	1088
NO OF BAYS PROVIDED				=	935
NO OF 2 WHEELER PROVIDED				=	34

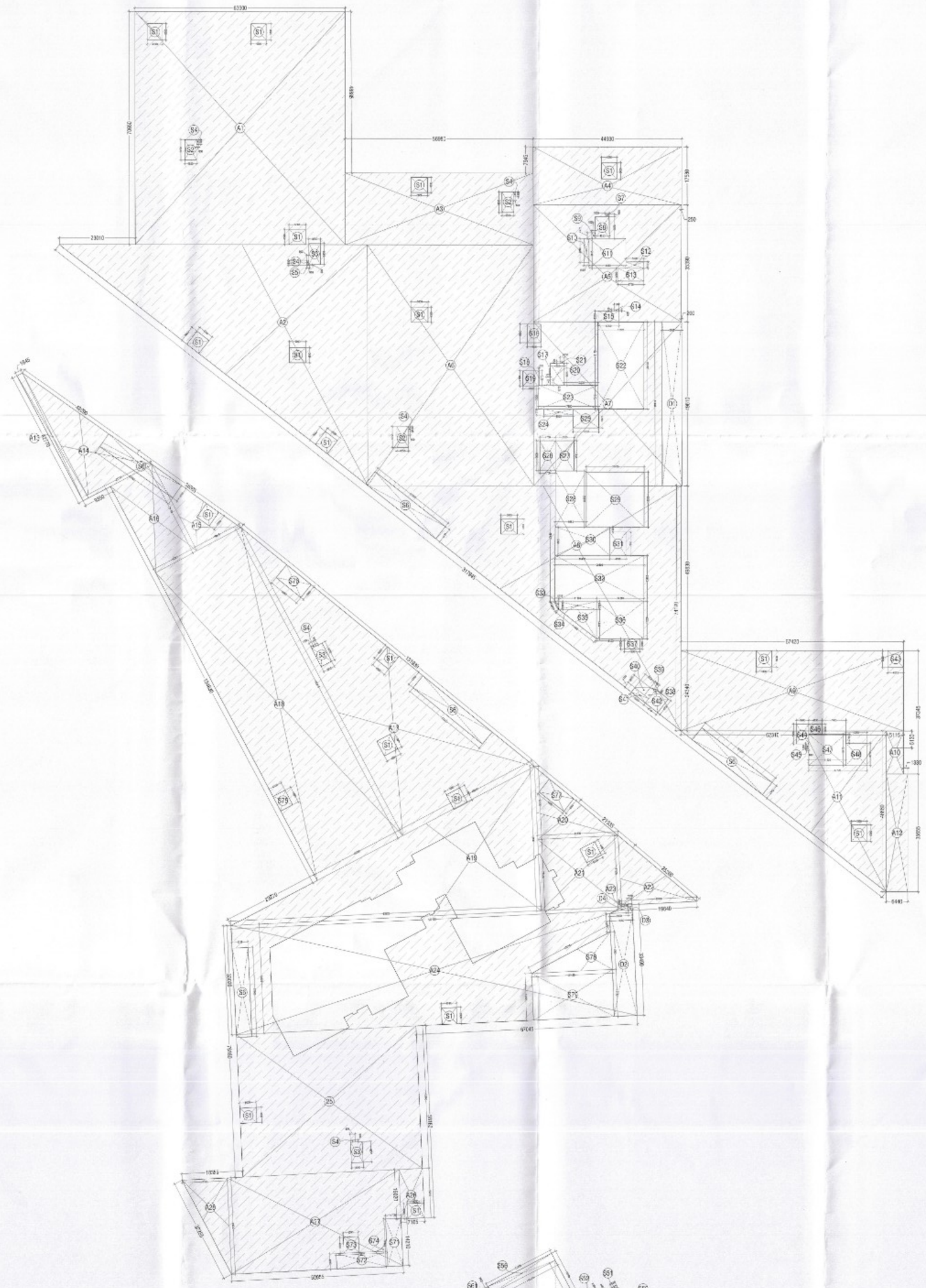

BASEMENT-2 AREA DIAGRAM

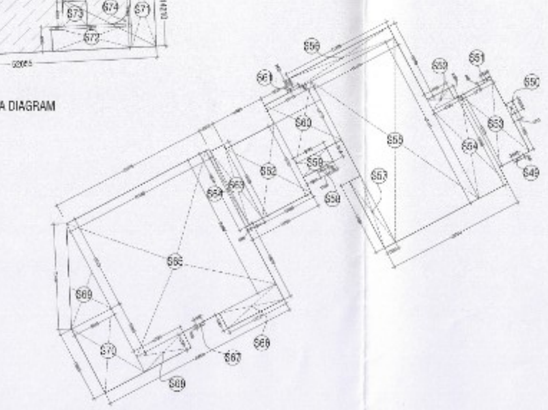

S.T.P.(HQ) Member Secretary B.P.A.C.
S.T.P.(G) Member B.P.A.C.
C.T.P.(HQ) Chairman B.P.A.C.
DTP(HQ)
ATP(HQ)
AD
PA
ATP
SUNIL KUMAR PA(HQ)
JDT(HQ) Member BPAC

SANCTIONED
TO BE READ WITH THIS OFFICE MEMO NO.: 37419
DATED: 25/10/2025

KEY PLAN

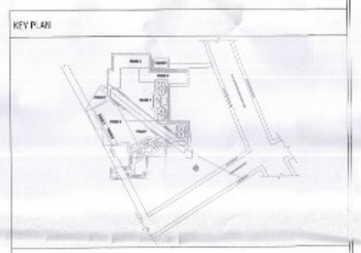

PRINCIPAL ARCHITECT

ACPL
ISO 9001:2015
Architecture Planning and Planning
ACPL Design Ltd
www.acpldesign.com
E: contact@acpldesign.com, +91 11 24626290

N

CLIENT

EMAAR INDIA LTD.

PROJECT

PROPOSED RESIDENTIAL COLONY (UNDER NLP POLICY DATED 11.05.2022)ON THE ADDITIONAL AREA MEASURING 1.4625 ACRES (LICENCE NO. 75 OF 2025 DATED 22.05.2025) ADJOINING TO ALREADY LICENSE (SHAVED) AREA 5(PASURING 24.4375 ACRES (LICENCE NO. 10 OF 2025 DATED 16.01.2025)THERBY MAKING TOTAL AREA MEASURING 25.90 ACRES, SECTOR-86, GURUGRAM BRING DEVELOPED BY EMAAR INDIA LTD.

EMAAR (INDIA) LIMITED
OWNER/AUTH. SIGNATURE

KULMEET SHANGARI
ARCHITECT
CA/2012-27121
ARCHITECT'S SIGNATURE

DRAWING TITLE

BASEMENT -2 _AREA DETAIL & AREA DIAGRAM

DRAWING NO. A-06A SCALE : 1:550