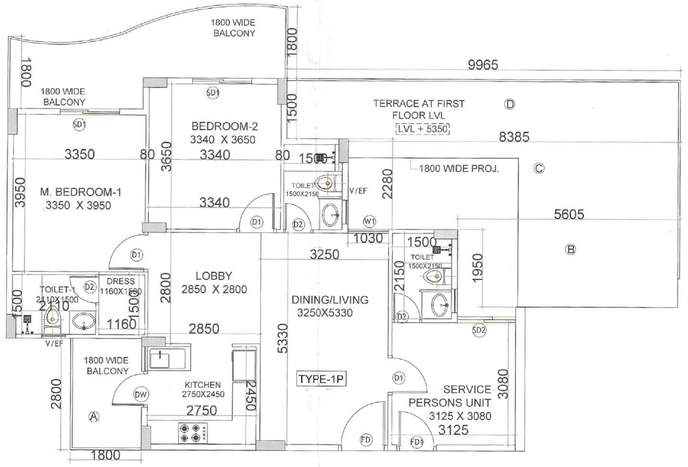

TOWER-B -2 BHK + SERVICE PERSONS UNIT (TYPE-1P)

CARPET AREA = 81.30 SQ.MT.

BALCONY / TERRACE AREA = 62.47 SQ.MT.

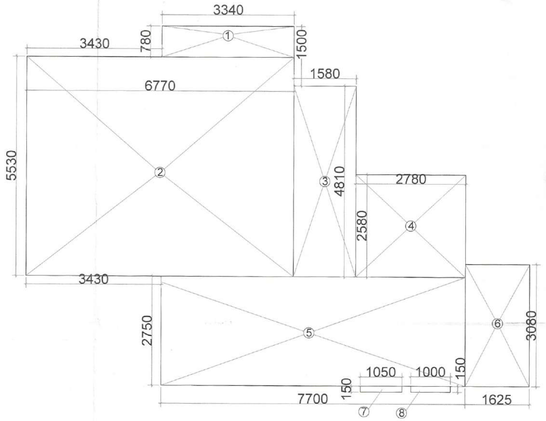

TOWER-B - 2 BHK + SERVICE PERSONS UNIT (TYPE-1P)

CARPET AREA DIAGRAM

2 BHK + SERVICE PERSONS UNIT CARPET AREA (TYPE 1P)						
1	1	3.340	X	0.780	=	2.61
2	1	6.770	X	5.530	=	37.44
3	1	1.580	X	4.810	=	7.60
4	1	2.780	X	2.580	=	7.17
5	1	7.700	X	2.750	=	21.18
6	1	1.625	X	3.080	=	5.01
7	1	1.050	X	0.150	=	0.16
8	1	1.000	X	0.150	=	0.15
TOTAL CARPET AREA					=	81.30
BALCONY/TERRACE AREA						
A	1	1.800	X	2.800	=	5.04
B	1	5.605	X	1.950	=	10.93
C	1	8.385	X	2.280	=	19.12
D	1	9.965	X	1.500	=	14.95
E	1	AREA AS PER POLY LINE			=	12.43
TOTAL AREA					=	62.47

S.T.P.(HQ) Member Secretary B.P.A.C. — S.T.P.(G) Member B.P.A.C. — C.T.P.(HR) Chairman B.P.A.C.

DTP(HQ) — ATP(HQ) — JD(HQ) Member BPAC — JD. — P.A. — A.T.P — DINESH KUMAR PA(HQ)

TOWER B UNIT SUMMARY							
S.NO	TOWER NO.	UNIT TYPE	NO OF UNITS	CARPET AREA	BALCONY/ TERRACE AREA	TOTAL CARPET AREA IN SQ.MT.	TOTAL BALCONY/ TERRACE AREA IN SQ.MT.
1	1st.FLOOR	TYPE-1P (2BHK + SERVICE PERSONUNIT)	4	81.30	62.47	325.20	249.88
2	2nd. FLOOR	TYPE-1 (2BHK + SERVICE PERSON)	4	81.30	28.91	325.20	115.64
3	3rd.FLOOR	TYPE-1 (2BHK + SERVICE PERSONUNIT)	4	81.30	28.91	325.20	115.64
4	4th. FLOOR	TYPE-1 (2BHK + SERVICE PERSON)	4	81.30	28.91	325.20	115.64
5	5th.FLOOR	TYPE-1 (2BHK + SERVICE PERSONUNIT)	4	81.30	28.91	325.20	115.64
6	6th. FLOOR	TYPE-1 (2BHK + SERVICE PERSON)	4	81.30	28.91	325.20	115.64
7	7th.FLOOR	TYPE-1 (2BHK + SERVICE PERSONUNIT)	4	81.30	28.91	325.20	115.64
8	8th. FLOOR	TYPE-1 (2BHK + SERVICE PERSON)	4	81.30	28.91	325.20	115.64
9	9th.FLOOR	TYPE-1 (2BHK + SERVICE PERSONUNIT)	4	81.30	28.91	325.20	115.64
10	10th. FLOOR	TYPE-1 (2BHK + SERVICE PERSON)	4	81.30	28.91	325.20	115.64
11	11th.FLOOR	TYPE-1 (2BHK + SERVICE PERSONUNIT)	4	81.30	28.91	325.20	115.64
12	12th. FLOOR	TYPE-1 (2BHK + SERVICE PERSON)	4	81.30	28.91	325.20	115.64
13	13th.FLOOR	TYPE-1 (2BHK + SERVICE PERSONUNIT)	4	81.30	28.91	325.20	115.64
14	14th. FLOOR	TYPE-1 (2BHK + SERVICE PERSONUNIT)	4	81.30	28.91	325.20	115.64
15	15th.FLOOR	TYPE-1 (2BHK + SERVICE PERSONUNIT)	4	81.30	28.91	325.20	115.64
16	16th. FLOOR	TYPE-1 (2BHK + SERVICE PERSONUNIT)	4	81.30	28.91	325.20	115.64
17	17th. FLOOR	TYPE-1 (2BHK + SERVICE PERSONUNIT)	4	81.30	28.91	325.20	115.64
18	18th.FLOOR	TYPE-1 (2BHK + SERVICE PERSONUNIT)	4	81.30	28.91	325.20	115.64
19	19th. FLOOR	TYPE-1 (2BHK + SERVICE PERSONUNIT)	3	81.30	28.91	243.90	86.73
		2 BHK UNIT TYPE-3 (REFUGE AREA)	1	67.62	17.47	67.62	17.47
		TOTAL	76			6165.12	2319.96

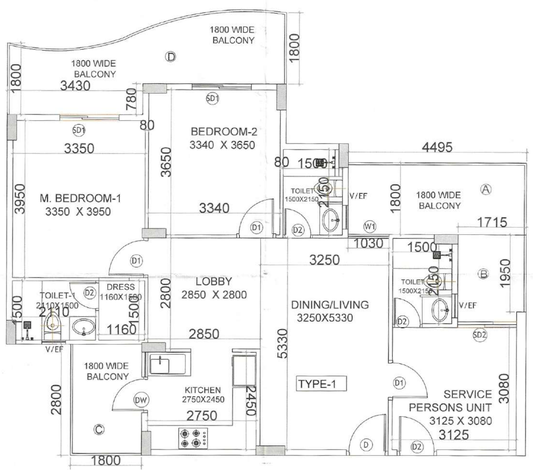

TOWER- B - 2 BHK + SERVICE PERSONS UNIT (TYPE-1)

CARPET AREA = 81.30 SQ.MT.

BALCONY / TERRACE AREA = 28.91 SQ.MT.

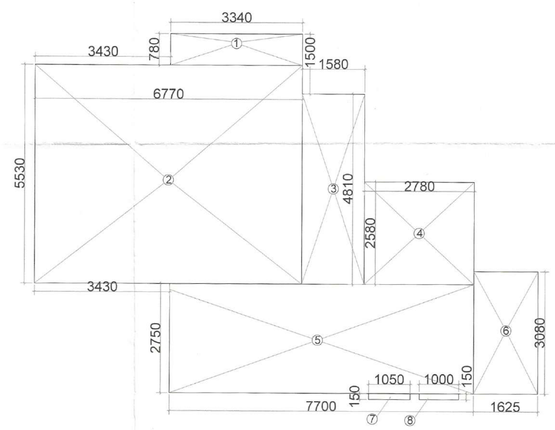

TOWER-A- 2 BHK + SERVICE PERSONS UNIT (TYPE-1)

CARPET AREA DIAGRAM

2 BHK + SERVICE PERSONS UNIT CARPET AREA (TYPE 1)						
1	1	3.340	X	0.780	=	2.61
2	1	6.770	X	5.530	=	37.44
3	1	1.580	X	4.810	=	7.60
4	1	2.780	X	2.580	=	7.17
5	1	7.700	X	2.750	=	21.18
6	1	1.625	X	3.080	=	5.01
7	1	1.050	X	0.150	=	0.16
8	1	1.000	X	0.150	=	0.15
TOTAL CARPET AREA					=	81.30
BALCONY AREA						
A	1	4.495	X	1.800	=	8.09
B	1	1.715	X	1.950	=	3.34
C	1	1.800	X	2.800	=	5.04
D	1	Area as per polyline			=	12.43
TOTAL AREA					=	28.91

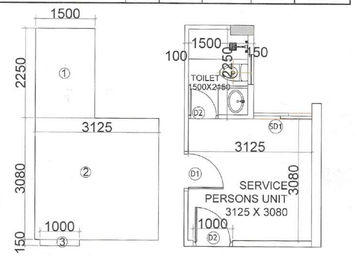

TOTAL SERVICE PERSON AREA						
1	1	1.500	X	2.250	=	3.38
2	1	3.125	X	3.080	=	9.63
3	1	0.150	X	1.000	=	0.15
TOTAL CARPET AREA					=	13.15
TOTAL SERVICE PERSON AREA = 76(UNITS) X 13.15					=	999.4

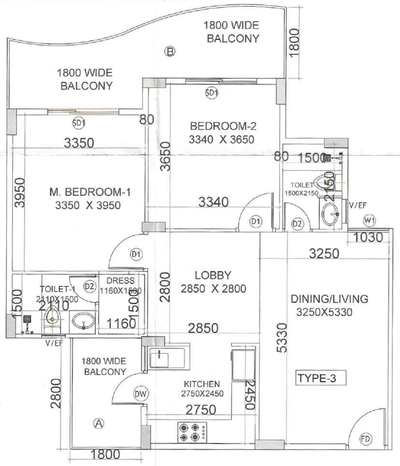

TOWER- B -2 BHK UNIT (TYPE-3)

CARPET AREA = 67.62 SQ.MT.

BALCONY / TERRACE AREA = 17.47 SQ.MT.

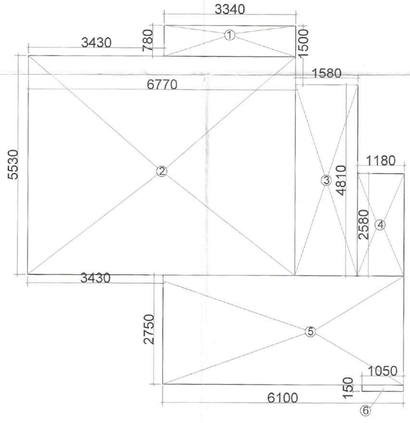

TOWER-B- 2 BHK (TYPE-3)

CARPET AREA DIAGRAM

2 BHK UNIT CARPET AREA (TYPE 3) (REFUGE FLOOR)						
1	1	3.340	X	0.780	=	2.61
2	1	6.770	X	5.530	=	37.44
3	1	1.580	X	4.810	=	7.60
4	1	1.180	X	2.580	=	3.04
5	1	6.100	X	2.750	=	16.78
6	1	1.050	X	0.150	=	0.16
TOTAL CARPET AREA					=	67.62
BALCONY AREA						
A	1	1.800	X	2.800	=	5.04
B	1	Area as per polyline			=	12.43
TOTAL AREA					=	17.47

SANCTIONED TO BE READ WITH THIS OFFICE MEMO NO.: 44865 DATED: 25/11/2025

CLIENT:- LAMOSE INFRA LLP

PROJECT : -

PROPOSED RETIREMENT HOUSING PROJECT (UNDER RETIREMENT HOUSING POLICY DATED 04.11.2024) OVER AN AREA MEASURING 1.69375 ACRES LICENSE NO 68 OF 2025 DATED 07.05.2025 IN THE REVENUE ESTATE OF VILLAGE SIKANDERPUR BADHA SECTOR -84 GURUGRAM MANESAR URBAN COMPLEX BEING DEVELOPED BY LAMOSE INFRA LLP.

SCALE : 1:60

NORTH

DRAWING NAME

TOWER B UNIT PLANS

DRAWING NO. SUB-14

LAMOSE INFRA LLP Authorised Signatory

VIMAL BAJAJ Architect CA/96/19791 938, Sector-14, Gurgaon

APPLICANT'S SIGN. ARCHITECT'S SIGN