PRODUCED BY AN AUTODESK EDUCATIONAL PRODUCT

ZONING PLAN OF GROUP HOUSING SCHEME MEASURING 9.943 ACRES IN RESIDENTIAL PLOTTED COLONY ON AREA MEASURING 52.218 ACRES (LICENCE NO. 35 OF 2009 DATED 11-07-2009) IN SECTOR-26, REWARI BEING DEVELOPED BY M/S B M GUPTA DEVELOPERS PVT. LTD. AND OTHERS

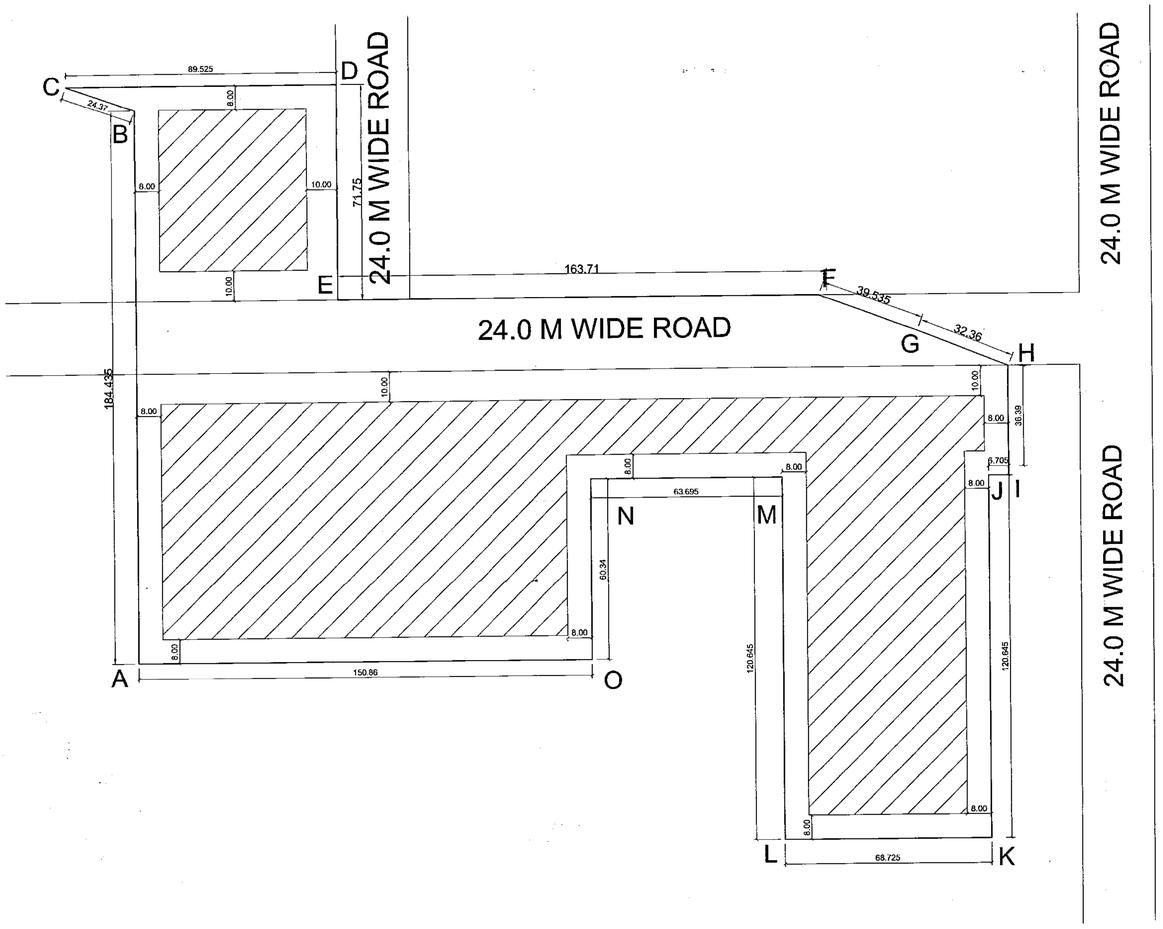

ZONED AREA 5.477 ACRES

ALL DIMENSIONS ARE IN METRES

FOR THE PURPOSE OF RULE 38(xlii) AND 48 (2) OF THE PUNJAB SCHEDULED ROADS AND CONTROLLED AREAS RESTRICTION OF UNREGULATED DEVELOPMENT RULES,1965.

1. SHAPE & SIZE OF SITE

The shape and size of the Group Housing Colony is in accordance with the demarcation plan shown as A to O as confirmed by DTP Gurgaon vide Endst. No . 3357 Dated 12.07.2010.

2. TYPE OF BUILDING PERMITTED

The type of building permitted on this site shall be buildings designated in the form of flatted development for residential purpose or any ancillary or appurtenant building including community facilities, public amenities and public utility as may be prescribed and approved by the Director General, Town and Country Planning, Haryana.

3. GROUND COVERAGE AND FAR

a. Building shall only be permitted with in the portion of the site marked as ▨ build able zone and no where else.

b. The maximum coverage on ground floor shall be 35% and that on subsequent floors shall be 30% on the area of 9.943 acres.

c. The maximum FAR shall not exceed 175 on the area of 9.943 acres. However, it shall not include community buildings which shall be as per the prescribed norms, the building plan of which shall have to be got approved from the Director General, Town and Country Planning, Haryana.

4. HEIGHT OF BUILDING

The height of the building block, subject of course to the provisions of the site coverage and FAR, shall be governed by the following:-

a. The maximum height of the buildings shall not be more than as allowed by National Airport Authority and shall not exceed 1.5 times (the width of the road abutting) plus the front open space.

b. If a building abuts on two or more streets of different widths, the buildings shall be deemed to face upon the street that has the greater width and the height of the buildings shall be regulated by the width of that street and may be continued to this height to a depth of 24M, along the narrow street.

c. Building/Structures which rise to 30 meters or more in height shall be constructed if no objection certificate has been obtained from the National Airport Authority.

d. All building block(s) shall be constructed so as to maintain an interse distance not less the set back required for each building according to the table below:-

S.No.	HEIGHT OF BUILDING (in meters)	SET BACK / OPEN SPACE TO BE LEFT AROUND BUILDINGS.(in meters)
1.	10	3
2.	15	5
3.	18	6
4.	21	7
5.	24	8
6.	27	9
7.	30	10
8.	35	11
9.	40	12
10.	45	13
11.	50	14
12.	55 & above	16

e. To ensure fire safety and structural stability of the buildings of more than 60 meters in height, the developer shall submit the structural drawings duly vetted from reputed institute like IIT Delhi, IIT Roorkee, PEC Chandigarh or NIT Kurukshetra etc. Fire Fighting Scheme shall be got approved from the Director. Urban Local Bodies, Haryana or any person authorized by the Director,Urban Local bodies, Haryana. These approvals shall be obtained prior to starting the construction work at site.

f. If such interior or exterior open space is intended to be used for the benefit of more than one building belonging to the same owner, then the width of such open air space shall be the one specified for the tallest building as specified above.

5. SUB-DIVISION OF SITE

a. The site of the Group Housing Colony shall be governed by the Haryana Apartment Ownership Act.

b. The site shall not be sub divided or fragmented in any manner whatsoever.

6. GATE POST AND BOUNDARY WALL

Such Boundary wall, railings or their combination, hedges or fences along with gates and gate posts shall be constructed as per design approved by DG,TCP, Haryana. In addition to the gate/gates an additional wicket gate not exceeding 1.25 meters width may be allowed in the front and side boundary wall provided that no main gate shall be allowed to open on the sector road/public open space.

7. DENSITY

a. The minimum density of the population provided in the colony shall be 100 PPA and the maximum be 250 PPA on the area of 9.943 acres.

b. For computing the density, the occupancy per main dwelling unit shall be taken as five persons and for service dwelling unit two persons per room or one person per 80 sq. feet of living area, whichever is more.

8. ACCOMMODATION FOR SERVICE POPULATION

Adequate accommodation shall be provided for domestic servants and other service population of EWS.The number of such dwelling units for domestic servants shall not be less then 10% of the number of main dwelling units and the carpet area of such a unit if attached to the main units shall not be less than 140 sq.ft. In addition 15% of the total number of dwelling units having a minimum area of 200 sq.ft shall be earmarked for E.W.S category.

9. PARKING

a. Parking space shall be provided @ 1.5 Equivalent Car Space for each dwelling unit. These parking spaces shall be allotted only to the flat holders and shall not be allotted, leased, sold or transferred in any manner to the third party. The area for parking per car shall be as under:-

i) Basement. 35 sqm.
ii) Stilts. 30 sqm.
iii) Open. 25 sqm.

b. At least 75% of the equivalent car spaces shall be provided in the form of covered parking. Further minimum 5% of the total parking will be made available to the EWS category flats.

c. The covered parking in the basement or in the form of multi level parking above ground level shall not be counted towards FAR. However, in case of multi level parking above the ground level the foot print of separate parking building block shall be counted towards ground coverage. In case of provision of mechanical parking in the basement floor/ upper stories, the floor to ceiling height of the basement / upper floor may be maximum of 4.5 meter. Other than the mechanical parking the floor to ceiling height in upper floor shall not be more than 2.4mtr. below the hanging beam.

10. LIFTS AND RAMPS

Ramps would be optional in Group Housing building in case of 100% stand by generators along with automatic switchover are provided for running of lifts along with stairs. However, in case of buildings having more than four storey lifts with 100% stand by generators along with automatic switchover would be essential. At least one lift shall be provided with minimum size of 1.80 M X 3.00 M. The clear width of the ramp leading to the basement shall be 4.00 meters with an adequate slope not steeper than 1:10. The entry and exit shall be separate preferably at opposite ends.

11. OPEN SPACES

While all the open spaces including those between the blocks and wings of buildings shall be developed, equipped and landscaped according to the plan approved by the DG,TCP, Haryana. At least 15% of the total site area shall be developed as organized open space i.e tot lots and play ground.

12. APPROVAL OF BUILDING PLANS

The building plans of the buildings to be constructed at site shall have to be got approved from the DG,TCP, Haryana (under section 8(2) of the Act No.41 of 1963), before taking up the construction.

13. BUILDING BYE-LAWS

The construction of the building/buildings shall be governed by the building rules provided in the part VII of the Punjab Scheduled Roads and Controlled Areas, Restriction of Unregulated Development Rules, 1965. On the points where such rules are silent and stipulate no condition or norm, the model building bye-laws issued by the ISI, and as given in the NBC shall be followed as may be approved by DG,TCP, Haryana.

14. CONVENIENT SHOPPING

0.5% of the area of 9.943 acres area shall be reserved to cater for essential convenient shopping with the following conditions.

a. The ground coverage of 100% with FAR of 100 will be permissible. However this will be a part of the permissible ground coverage and FAR of the Group Housing Colony.

b. The size of Kiosk/Shops shall not be more than 2.75 meter x 2.75 meter and 2.75 meter x 8.25 meter.

c. The height of Kiosk/Shops/Departmental Store shall not exceed 4.00 meter.

15. PROVISION OF COMMUNITY BUILDINGS

The community buildings shall be provided as per the composite norms in the Group Housing Colony.

16. BASEMENT

Four level basements within the building zone of the site provided it flushes with the ground and is properly landscaped may be allowed. The basement may in addition to parking could be utilized for generator room, lift room, fire fighting pumps, water reservoir, electric sub-station, air-conditioning plants and toilets/ utilities, if they satisfy the public health requirements and for no other purposes. Area under stilts (only for parking) and basement shall not be counted towards FAR. Basement shall not be used for storage/commercial purposes but will be used only for Parking and ancillary services of the main building and it is further stipulated that no other partitions of basement will be permissible for uses other than those specified above.

17. APPROACH TO SITE

The vehicular approach to the site and parking lots shall be planned and provided giving due consideration to the junctions of and the junctions with the surrounding roads to the satisfaction of the DG,TCP , Haryana.

18. FIRE SAFETY MEASURES

a. The owner will ensure the provision of proper fire safety measures in the multi storey buildings conforming to the provisions of Rules 1965/ NBC and the same should be got certified from the competent authority.

b. Electric Sub Station / generator room if provided should be on solid ground near DG/LT. Control panel on ground floor or in upper basement and it should be located on outer periphery of the building, the same should be got approved from the competent authority.

19. SOLAR WATER HEATING SYSTEM

The provision of solar water heating system shall be as per norms specified by HAREDA and shall be made operational in each building block before applying for an occupation certificate.

20. RAIN WATER HARVESTING SYSTEM

The rain water harvesting system shall be provided as per Central Ground Water Authority norms/Haryana Govt. notification as applicable.

21. The colonizer shall obtain the clearance/NOC as per the provisions of the Notification No. S.O. 1533(E) Dated 14.9.2006 issued by Ministry of Environment and Forest, Government of India before starting the construction/ execution of development works at site.

22. The coloniser/owner shall use only Compact Fluorescent Lamps fittings for internal lighting as well as campus lighting.

23. That no separate zoning plan is approved for community sites earmarked within a Group Housing Colony. The community buildings shall be constructed within a period of three years. The time period of three years for construction of community sites shall start from the issuance of sanction letter of this zoning plan. In case of failure to construct within such three year period, the Government may take over the community site in accordance with the provisions of Section 3(3)(a)(iv) of the Act No. 8 of 1975 .

24. That the owner shall construct the EWS flats within 2 years and give the advertisement in the newspapers for inviting the application for EWS flats in their Group Housing Colony within 12 months from the issuance of sanction letter of this zoning plan.

DRG. NO. DG,TCP 2959 DATED:- 27.12.2011

(SUNITA SETHI) DTP (HQ)	(J. S. REDHU) CTP (HR)	(T. C. GUPTA, IAS) DG,TCP (HR)

PRODUCED BY AN AUTODESK EDUCATIONAL PRODUCT
PRODUCED BY AN AUTODESK EDUCATIONAL PRODUCT
PRODUCED BY AN AUTODESK EDUCATIONAL PRODUCT