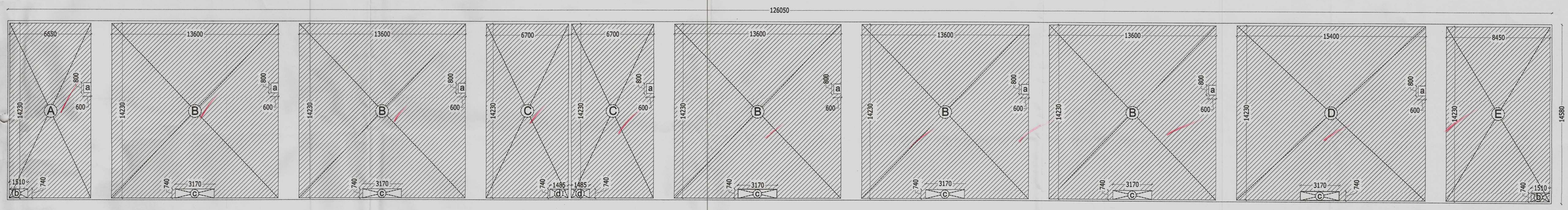

GROUND FLOOR PLAN

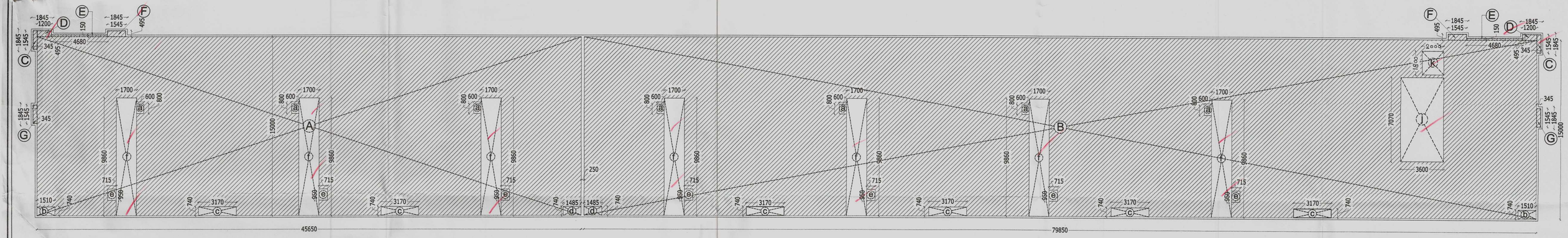

FIRST FLOOR PLAN

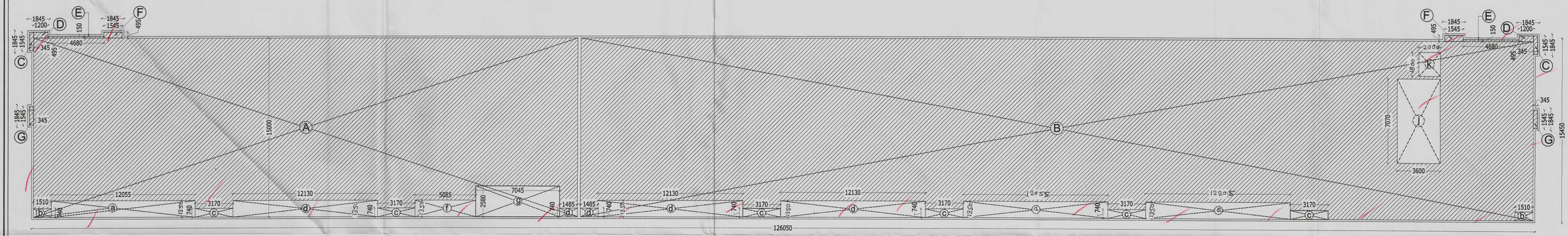

SECOND FLOOR PLAN

CARPET AREA UNDER GROUND FLOOR									
A	=	6.650	x	14.230	x	1	=	94.630	Sq.mt
B	=	13.600	x	14.230	x	5	=	967.640	Sq.mt
C	=	6.700	x	14.230	x	2	=	190.682	Sq.mt
D	=	15.400	x	14.230	x	1	=	219.142	Sq.mt
E	=	8.450	x	14.230	x	1	=	120.244	Sq.mt
						TOTAL	=	1592.337	Sq.mt
Deductions									
a	=	0.800	x	0.600	x	8	=	3.840	Sq.mt
b	=	1.510	x	0.740	x	2	=	2.235	Sq.mt
c	=	3.170	x	0.740	x	6	=	14.075	Sq.mt
d	=	1.485	x	0.740	x	2	=	2.198	Sq.mt
						TOTAL	=	22.347	Sq.mt
CARPET AREA FOR GROUND FLOOR									
1592.337		-		22.347			=	1569.990	Sq.mt

CARPET AREA UNDER FIRST FLOOR									
A	=	45.650	x	15.000	x	1	=	684.750	Sq.mt
B	=	79.850	x	15.000	x	1	=	1197.750	Sq.mt
C	=	0.345	x	1.545	x	2	=	1.066	Sq.mt
D	=	1.200	x	0.495	x	2	=	1.188	Sq.mt
E	=	4.680	x	0.150	x	2	=	1.404	Sq.mt
F	=	1.545	x	0.495	x	2	=	1.530	Sq.mt
G	=	0.345	x	1.545	x	2	=	1.066	Sq.mt
						TOTAL	=	1888.754	Sq.mt
Deductions									
a	=	0.800	x	0.600	x	7	=	3.360	Sq.mt
b	=	1.510	x	0.740	x	2	=	2.235	Sq.mt
c	=	3.170	x	0.740	x	6	=	14.075	Sq.mt
d	=	1.485	x	0.740	x	2	=	2.198	Sq.mt
e	=	0.715	x	0.950	x	7	=	4.755	Sq.mt
f	=	1.700	x	9.860	x	7	=	117.334	Sq.mt
j	=	3.600	x	7.070	x	1	=	25.452	Sq.mt
k	=	1.800	x	2.000	x	1	=	3.600	Sq.mt
						TOTAL	=	173.008	Sq.mt
CARPET AREA FOR FIRST FLOOR									
1888.754		-		173.008			=	1715.746	Sq.mt

CARPET AREA UNDER SECOND FLOOR									
A	=	45.650	x	15.000	x	1	=	684.750	Sq.mt
B	=	79.850	x	15.000	x	1	=	1197.750	Sq.mt
C	=	0.345	x	1.545	x	2	=	1.066	Sq.mt
D	=	1.200	x	0.495	x	2	=	1.188	Sq.mt
E	=	4.680	x	0.150	x	2	=	1.404	Sq.mt
F	=	1.545	x	0.495	x	2	=	1.530	Sq.mt
G	=	0.345	x	1.545	x	2	=	1.066	Sq.mt
Deductions.						TOTAL	=	1888.754	Sq.mt
e	=	12.205	X	1.350	X	1	=	16.476	Sq.mt
a	=	12.055	x	1.350	x	2	=	32.548	Sq.mt
b	=	1.510	x	0.740	x	2	=	2.235	Sq.mt
c	=	3.170	x	0.740	x	6	=	14.075	Sq.mt
d	=	12.130	x	1.350	x	3	=	49.126	Sq.mt
f	=	5.085	x	1.350	x	1	=	6.86	Sq.mt
g	=	7.045	x	2.580	x	1	=	18.176	Sq.mt
j	=	3.600	x	7.070	x	1	=	25.452	Sq.mt
k	=	1.800	x	2.000	x	1	=	3.600	Sq.mt
						TOTAL	=	168.548	Sq.mt
CARPET AREA FOR SECOND FLOOR									
1888.754		-		168.548			=	1720.20	Sq.mt

TOTAL CARPET AREA IN POCKET-1	=	5005.94	Sq.mt

PROJECT :

ADDITIONAL AND FRESH BUILDING PLAN OF COMMERCIAL COLONY (MIX LAND USE COMMERCIAL/ RESIDENTIAL) FOR AN ADDITIONAL LAND MEASURING 11.49375 ACRES (LICENCE NO-51 OF 2017 DATED 22/07/2017) AND 0.144 ACRES (LICENCE NO-52 OF 2017 DATED 22/07/2017) , TOTAL ADDITIONAL AREA 11.63775 ACRES IN LICENSED COMMERCIAL COLONY (MIX LAND USE COMMERCIAL/RESIDENTIAL) MEASURING 10.6585 ACRES (2.0875+8.571ACRES, LICENCE N0.17 OF 2012 DATED 02.03.2012 AND LICENCE NO-62 OF 2012 DATED 15/06/2012), THERE BY MAKING THE TOTAL SCHEME AREA **22.29625 ACRES** , SECTOR-79, FARIDABAD BEING DEVELOPED BY **ROBUST BUILDWELL PVT. LTD.**

Architect (HQ)

S.T.P. (HQ) Member-Secretary B.P.C. | S.T.P. (F) Member B.P.C. | C.T.P. (Hr.) Chairman B.P.C.

(BALWANT SINGH) S.D.

DRAWING TITLE

POCKET- 1
CARPET AREA DETAIL
SCO NO- 143 to 154 & 154a, 154b, 154c & 154d (16 No's)

DATE : JAN 2018 | SCALE :- 1 : 100

DEALT BY: (SALMAN BAIG) | CHECKED BY: A.D.E.O. (HQ) DFS PKL Member B.P.C.

ARCHITECT

MD. AMANULLAH
ARCHITECT
CA NO. 2012/54539

OWNER

WORLD STREET
ROBUST BUILDWELL PVT. LTD.

SHEET NO. 40