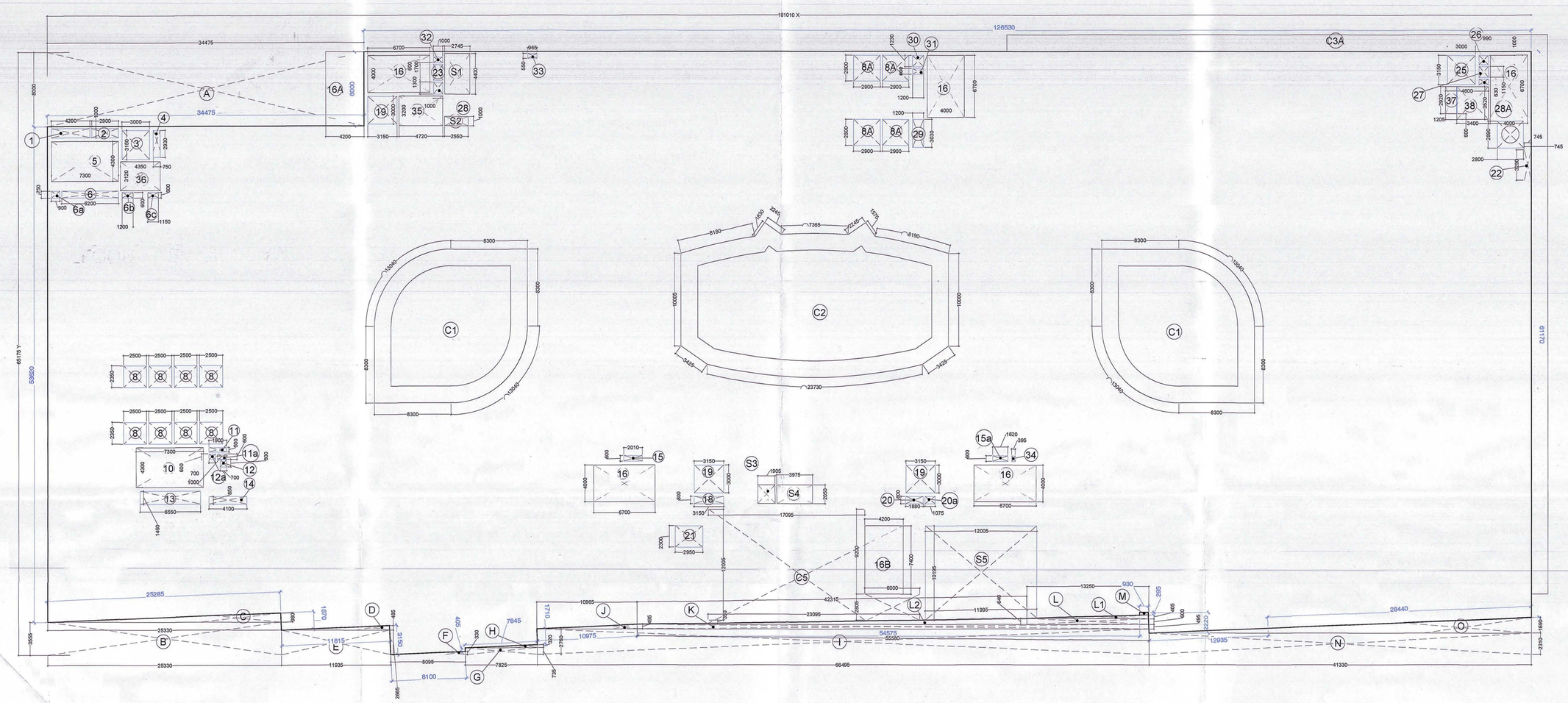

SECOND FLOOR AREA DIAGRAM

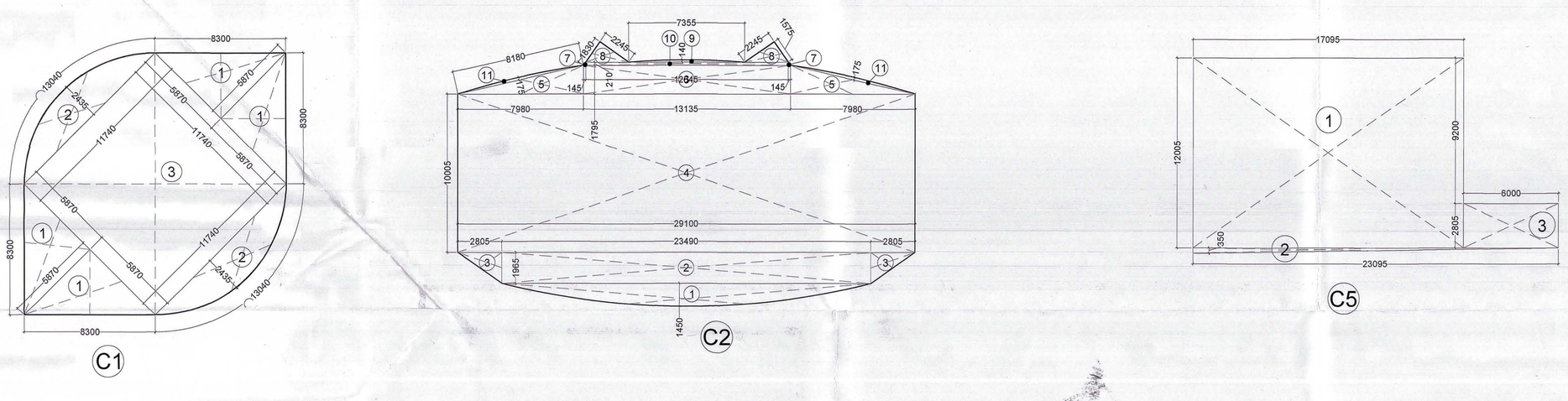

BLOWUP DETAIL

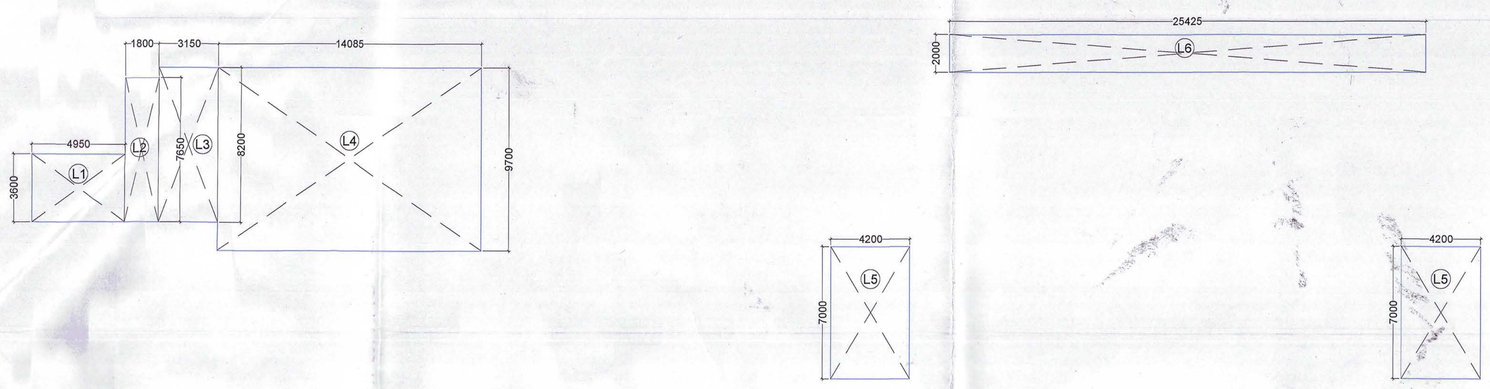

SECOND FLOOR NON FAR AREA DIAGRAM (LOFT)

SECOND FLOOR AREA CALCULATION			
X x Y = Z	X	Y	Z (in Sq.Mt.)
	161.01	65.175	10493.827

DEDUCTION(X1)					
S. No.	COEFF.	WIDTH	LENGTH	NOS.	Area in sq.mt.
A	1	34.475	8.000	1	275.800
B	1	25.330	3.555	1	90.048
C	0.5	25.330	0.980	1	12.412
D	0.5	11.935	0.485	1	2.894
E	1	11.935	2.665	1	31.807
F	0.5	8.095	0.330	1	1.336
G	1	7.825	0.735	1	5.751
H	0.5	7.825	0.320	1	1.252
I	1	66.495	2.760	1	183.526
J	0.5	10.965	0.495	1	2.714
K	1	55.580	0.495	1	27.512
L	1	13.250	0.600	1	7.950
L1	0.5	13.250	0.405	1	2.683
L2	0.5	42.310	0.640	1	13.539
M	1	0.930	0.295	1	0.274
N	1	41.330	2.310	1	95.472
O	0.5	41.330	1.690	1	34.924
C1	AS/GIVEN DETAILS			2	489.753
C2	AS/GIVEN DETAILS			1	410.769
C5	AS/GIVEN DETAILS			1	242.927
S1	1	2.745	4.4	1	12.078
S2	1	2.55	1	1	2.550
S3	1	1.905	2.05	1	3.905
S4	1	3.975	2.05	1	8.149
S5	1	12.005	10.195	1	122.391
1	1	4.2	1	1	4.200
2	1	2.9	1	1	2.900
3	1	3	3.15	1	9.450
4	1	0.75	2.93	1	2.198
5	1	7.3	4.3	1	31.390
6	1	8.2	0.75	1	4.650
6a	1	0.9	0.75	1	0.675
6b	1	1.2	0.6	1	0.720
6c	1	1.15	0.6	1	0.690
8	1	2.5	2.35	8	47.000
8A	1	2.9	2.8	4	32.480
10	1	7.3	4.3	1	31.390
11	1	1.9	0.5	1	0.950
11a	1	1	0.6	1	0.600
12	1	0.7	0.8	1	0.560
12a	1	0.7	0.6	1	0.420
13	1	6.55	1.46	1	9.563
14	1	4.1	0.85	1	3.485
15	1	2.01	0.6	1	1.206
15a	1	1.62	0.6	1	0.972
16	1	6.7	4	5	134.000
18	1	3.15	0.8	1	2.520
19	1	3.15	3	3	28.350
20	1	1.88	0.8	1	1.504
20a	1	1.075	0.8	1	0.860
21	1	2.95	2.3	1	6.785
22	1	0.745	3.29	1	2.451
23	1	1	1.7	1	1.700
25	1	3	3.15	1	9.450
26	1	0.99	1	1	0.990
27	1	0.99	1.15	1	1.139
28	1	1	1.3	1	1.300
28A	1	0.99	0.63	1	0.624
29	1	1.2	3.03	1	3.636
30	1	1.2	1.23	1	1.476
31	1	1.2	0.6	1	0.720
32	1	1	0.6	1	0.600
33	1	0.965	0.55	1	0.531
34	1	0.395	0.6	1	0.237
35	1	4.72	3.2	1	15.104
36	1	4.35	3.12	1	13.572
37	1	1.205	2.92	1	3.519
38	1	3.4	3.52	1	11.968
39	1	2.89	2.8	1	8.092
TOTAL					2519.041
TOTAL CUT-OUT AREA X1					2519.041

F.A.R. = Z -	10493.827	-	2519.04	7974.785
TOTAL FAR AREA			=	7974.785

AREA C1					
S. No.	COEFF.	WIDTH	LENGTH	NOS.	Area in sq.mt.
1	0.5	5.870	5.870	4	68.91
2	0.667	11.740	2.435	2	38.13
3	1	11.740	11.740	1	137.83
TOTAL					244.88

AREA C2					
S. No.	COEFF.	WIDTH	LENGTH	NOS.	Area in sq.mt.
1	0.667	23.490	1.450	1	22.718
2	1	23.490	1.965	1	46.158
3	0.5	2.800	1.965	2	5.502
4	1	29.100	10.000	1	291.000
5	0.5	7.980	1.800	2	14.364
6	1	12.845	1.800	1	23.121
7	0.5	0.145	0.21	2	0.030
8	0.5	1.575	2.245	2	3.536
9	0.667	7.355	0.14	1	0.687
10	1	12.845	0.21	1	2.697
11	0.667	8.18	0.175	1	0.955
TOTAL					410.769

AREA C5					
S. No.	COEFF.	WIDTH	LENGTH	NOS.	Area in sq.mt.
1	1	17.095	12.005	1	205.225
2	0.5	23.095	0.350	1	4.042
3	1	6.000	2.805	2	33.660
TOTAL					242.927

NON FAR AREA					
5	1	7.3	4.3	1	31.390
10	1	7.3	4.3	1	31.390
16	1	6.7	4	5	134.000
16A	1	4.2	8	1	33.600
16B	1	7.4	4.195	1	31.043
35	1	4.72	3.2	1	15.104
36	1	4.35	3.12	1	13.572
37	1	1.205	2.92	1	3.519
38	1	3.4	3.52	1	11.968
S1	1	2.745	4.4	1	12.078
S2	1	2.55	1	1	2.550
S3	1	1.905	2.05	1	3.905
S4	1	3.975	2.05	1	8.149
L1	1	4.95	3.6	1	17.820
L2	1	1.8	7.65	1	13.770
L3	1	3.15	8.2	1	25.830
L4	1	14.085	9.7	1	136.625
L5	2	4.2	7	1	58.800
L6	1	25.425	2	1	50.850
TOTAL NON FAR AREA					635.962

TO BE READ WITH THIS OFFICE MEMO NO.:
DATED :

NOTES:-

1. ALL DRAWING ARE TO BE READ ONLY AND NOT TO BE SCALED.
2. ALL DIMENSIONS ARE IN MM UNLESS MENTIONED.
3. BASEMENTS ARE MECHANICALLY VENTILATED ONLY.
4. STRUCTURAL SYSTEM: BEAM- COLUMN SYSTEM.
5. SITE AREA IS AS PER APPROVED ZONING PLAN.
6. ALL FLOOR PLANS AND BASEMENTS HAVE AUTOMATIC SPRINKLER SYSTEM FOR FIRE FIGHTING.
7. GATE AND BOUNDARY WALL AS PER STANDARD DETAIL.
8. COMPLETE BUILDING WILL BE CENTRALIZED AIR CONDITIONED AND MECHANICALLY VENTILATED WITH 100% POWER BACKUP.

PROJECT

REVISE BUILDING PLAN FOR SETTING UP OF COMMERCIAL COLONY OVER AN AREA MEASURING 8.9375 ACRES (LICENCE NO, 17 OF 2010 DATED 13.02.2010 AND LICENCE NO. 150 OF 2022 DATED 28.09.2022) IN THE COMMERCIAL BELT OF SECTOR 68, GURUGRAM BEING DEVELOPED BY REACH PROMOTERS PVT. LTD.)

ARCHITECTS

ACPL

ISO 9001:2008

Architecture Management Planning

ACPL Design Ltd
www.acplonline.com
E-24, South Extension Tel+91 11 24622195
New Delhi 110049, India +91 11 24646709
E: contact@acplonline.com +91 11 24634069

This is a "PROVISIONAL BUILDING PLAN" approved only for the purpose of inviting objections from the general public

B.T.P (HQ) Member Secretary B.P.A.C. | B.T.P (G) Member B.P.A.C. | C.T.P (HQ) Chairman B.P.A.C.

DTP(HQ) ATP(HQ)

JD. PA AVP.

DINESH KUMAR FAI(HQ)

KEY PLAN

ARCHITECT'S SEAL & SIGNATURE

RAVI KUMAR GARG
ARCHITECT
CA/2013/58473

OWNER'S SEAL & SIGNATURE

JD (IT)
MEMBER
BPAC

REACH PROMOTERS PVT. LTD. Gurgaon

SCALE :- 1:300

NORTH

DRG. TITLE :
SECOND FLOOR
(AREA CALCULATION PLAN)

DRAWING NO.
7A