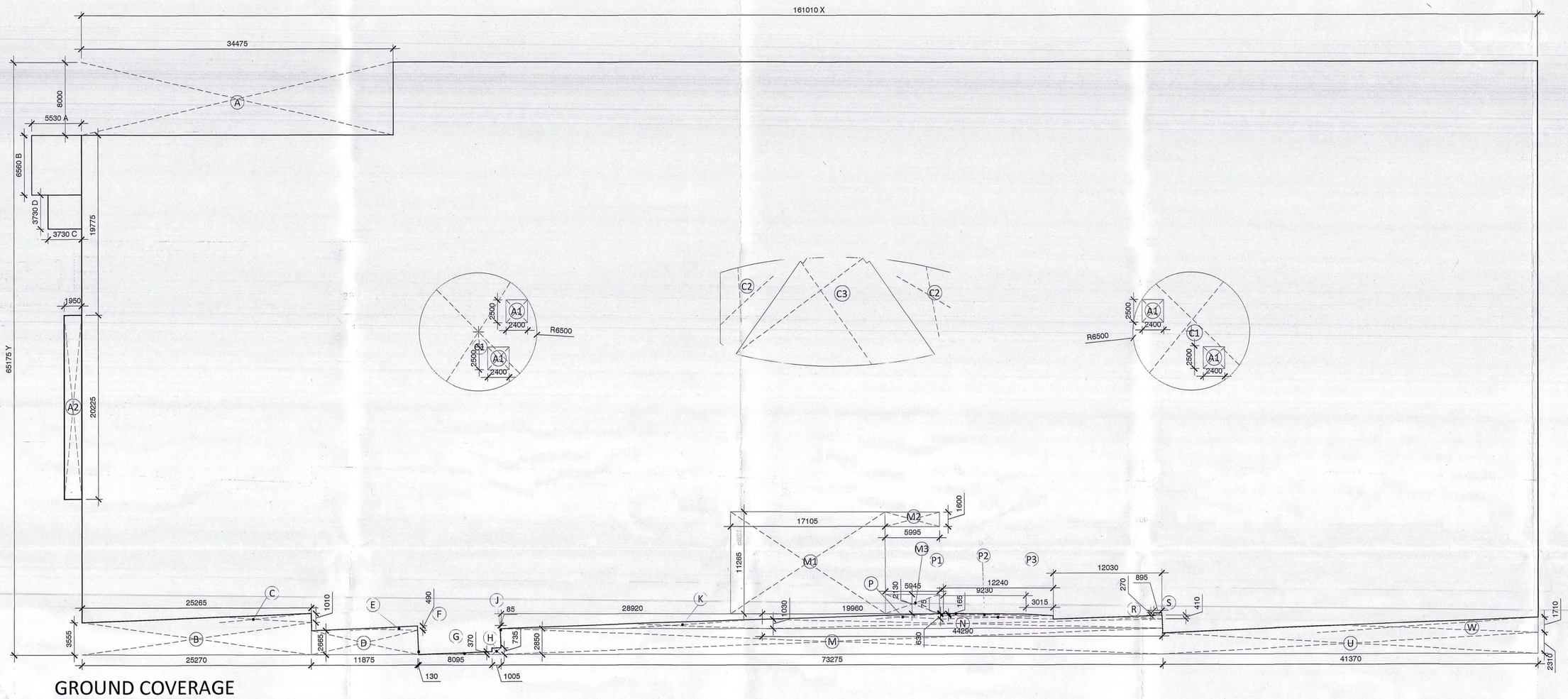

GROUND COVERAGE

GROUND COVERAGE FLOOR AREA CALCULATION			
S. No.	WIDTH	LENGTH	Area in sq.mt.
X x Y	161.01	64.825	10437.473
A x B	5.53	6.56	36.277
C x D	3.73	3.73	13.913
TOTAL Z			10487.663

ADDITION (Y1)					
S. No.	COEFF.	WIDTH	LENGTH	NOS.	Area in sq.mt.
A1	1	2.400	2.500	4	24.000
A2	1	1.950	20.225	1	39.439
TOTAL					63.439

DEDUCTION(X1)					
S. No.	COEFF.	WIDTH	LENGTH	NOS.	Area in sq.mt.
A	1	34.475	8	1	275.800
B	1	21.57	15.775	1	340.267
C	1	15.695	3.63	1	56.973
D	0.5	15.695	0.335	1	2.629
E	0.5	8.07	0.405	1	1.634
F	1	28.205	4.24	1	119.589
G	1	19.495	13.575	1	264.645
H	1	14.415	4.24	1	61.120
I	1	11.105	3.525	1	39.145
J	0.5	11.105	0.385	1	2.138
K	1	24.28	4.34	1	105.375
L	1	18.175	15.775	1	286.711
C1	3.14	6.5	6.5	2	265.330
C2	AS/GIVEN DETAILS			2	64.444
C3	AS/GIVEN DETAILS			1	173.156
TOTAL					2058.955
TOTAL CUT-OUT AREA X1					2058.955
AREA = (Z+Y1) - X1	10551.102	-	2058.95		8492.147
TOTAL GROUND COVERAGE AREA			=		8492.147

PLUMBING LEGEND

A	110 OD SOIL PIPE
B	110 OD WASTE PIPE
C	63 OD SOIL PIPE
D	40 OD WASTE PIPE
E	50 OD SOIL PIPE

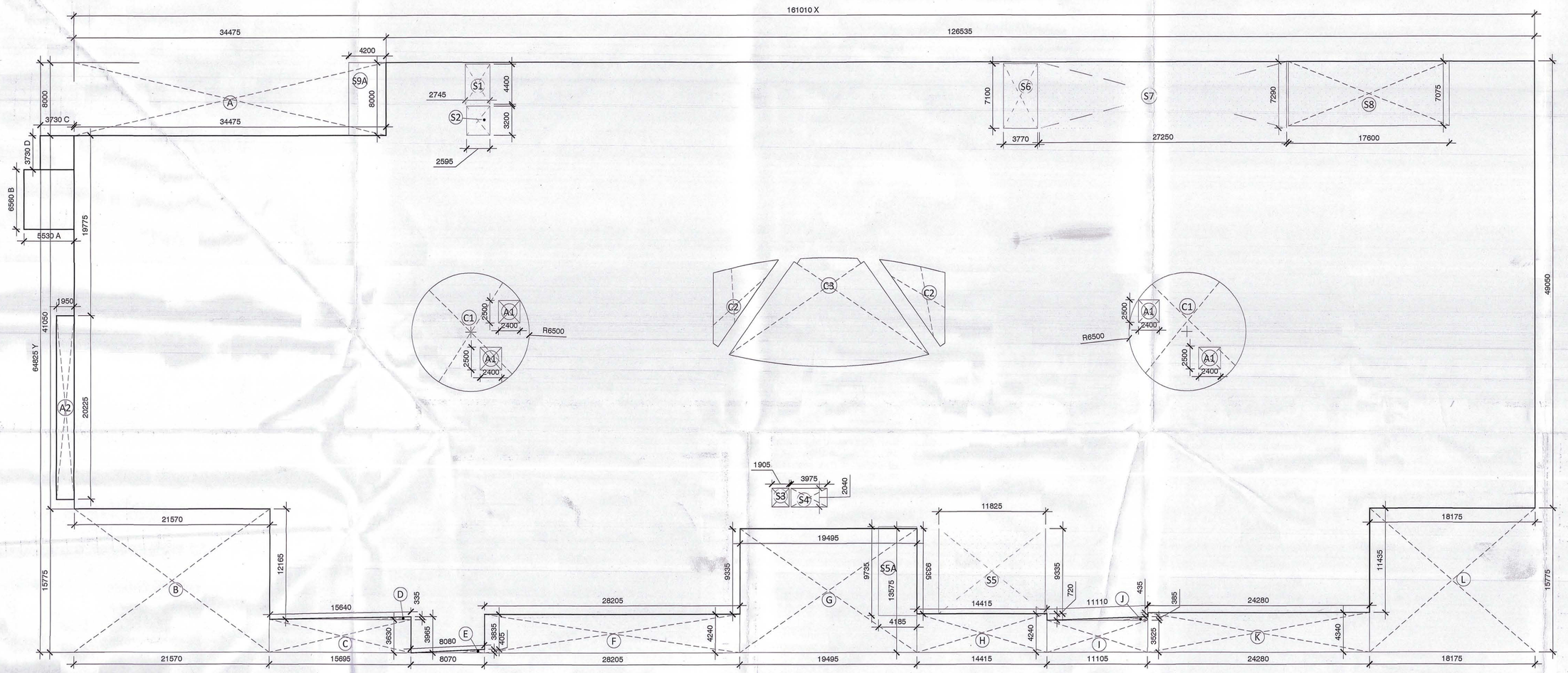

GROUND FLOOR AREA DIAGRAM

FIRE LEGEND

A	150Ø FIRE PIPE UPPER ZONE
A1	150Ø FIRE PIPE LOWER ZONE
B	150Ø SPRINKLER PIPE UPPER ZONE
B1	150Ø SPRINKLER PIPE LOWER ZONE
B2	150Ø ALTERNATE RISER UPPER ZONE
B3	150Ø ALTERNATE RISER LOWER ZONE
C	80Ø DRAIN PIPE

PLUMBING LEGEND

1	110 OD SOIL PIPE
2	110 OD WASTE PIPE
1a	160 OD SOIL PIPE
2a	160 OD WASTE PIPE
3	75 OD ANTISYPHONAGE VENT PIPE
4a	DOMESTIC WATER SUPPLY PIPE (HYDROPNEUMATIC)
5a	FLUSHING WATER SUPPLY PIPE (HYDROPNEUMATIC)
6	DOMESTIC WATER SUPPLY DN TAKE PIPE (OFFICE BLOCK)
7	FLUSHING WATER SUPPLY DN TAKE PIPE (OFFICE BLOCK)
7a	FLUSHING WATER RISER PIPE
8	DOMESTIC WATER RISER PIPE
9	SOFT WATER RISER PIPE
R2	110 OD RAIN WATER PIPE
R	160 OD RAIN WATER PIPE
R1	210 OD RAIN WATER PIPE

AREA C2				
1	6.335	4.435	0.5	14.048
2	6.335	0.63	1	3.991
3	5.32	5.065	0.5	13.473
4	7.345	0.145	0.667	0.710
TOTAL				32.222

AREA C3				
5	21.975	1.32	0.667	19.348
6	7.155	10.22	0.5	36.562
6A	7.155	10.22	0.5	36.562
7	7.665	9.99	1	76.573
8	6.23	0.105	0.667	0.436
9	6.23	0.555	1	3.458
10	0.39	0.555	0.5	0.108
10A	0.39	0.555	0.5	0.108
TOTAL				173.1555371

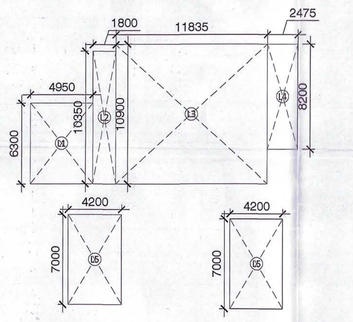

GROUND NON FAR AREA (LOFT)

NON FAR AREA					
S1	1	2.745	4.400	1	12.078
S2	1	2.595	3.200	1	8.304
S3	1	1.905	2.040	1	3.886
S4	1	3.975	2.040	1	8.109
S5	1	11.825	9.335	1	110.386
S5A	1	9.735	4.185	1	40.741
S6	1	3.770	7.100	1	26.767
S7	1	27.250	7.290	1	198.653
S8	1	17.600	7.075	1	124.520
S9A	1	4.200	8.200	1	34.440
L1	1	4.950	6.300	1	31.185
L2	1	1.800	10.350	1	18.630
L3	1	11.835	10.900	1	129.002
L4	1	2.475	8.200	1	20.295
L5	2	4.200	7.000	1	58.800
TOTAL NON FAR AREA					825.796

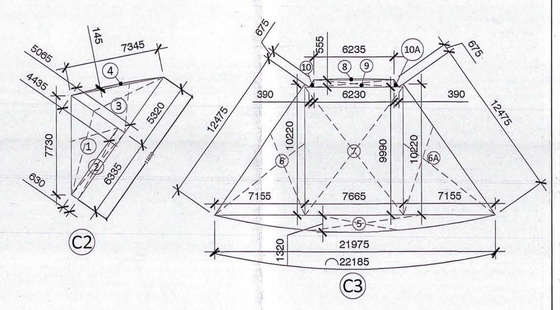

GROUND FLOOR AREA CALCULATION			
S. No.	WIDTH	LENGTH	Area in sq.mt.
X x Y	161.01	64.825	10437.473
A x B	5.53	6.56	36.277
C x D	3.73	3.73	13.913
TOTAL Z			10487.663

ADDITION (Y1)					
S. No.	COEFF.	WIDTH	LENGTH	NOS.	Area in sq.mt.
A1	1	2.400	2.500	4	24.000
A2	1	1.950	20.225	1	39.439
TOTAL					63.439

DEDUCTION(X1)					
S. No.	COEFF.	WIDTH	LENGTH	NOS.	Area in sq.mt.
A	1	34.475	8	1	275.800
B	1	21.57	15.775	1	340.267
C	1	15.695	3.63	1	56.973
D	0.5	15.695	0.335	1	2.629
E	0.5	8.07	0.405	1	1.634
F	1	28.205	4.24	1	119.589
G	1	19.495	13.575	1	264.645
H	1	14.415	4.24	1	61.120
I	1	11.105	3.525	1	39.145
J	0.5	11.105	0.385	1	2.138
K	1	24.28	4.34	1	105.375
L	1	18.175	15.775	1	286.711
C1	3.14	6.5	6.5	2	265.330
C2	AS/GIVEN DETAILS			2	64.444
C3	AS/GIVEN DETAILS			1	173.156
S1	1	2.745	4.400	1	12.078
S2	1	2.595	3.200	1	8.304
S3	1	1.905	2.040	1	3.886
S4	1	3.975	2.040	1	8.109
S5	1	11.825	9.330	1	110.327
S6	1	3.770	7.100	1	26.767
S7	1	27.250	7.290	1	198.653
S8	1	17.600	7.075	1	124.520
TOTAL					2551.599
TOTAL CUT-OUT AREA X1					2551.599
F.A.R. = (Z+Y1) - X1	10551.102	-	2551.599		7999.503
TOTAL FAR AREA			=		7999.503

TO BE READ WITH THIS OFFICE MEMO NO.:
DATED :

NOTES:-
1. ALL DRAWING ARE TO BE READ ONLY AND NOT TO BE SCALED.
2. ALL DIMENSIONS ARE IN MM UNLESS MENTIONED.
3. BASEMENTS ARE MECHANICALLY VENTILATED ONLY.
4: STRUCTURAL SYSTEM: BEAM- COLUMN SYSTEM.
5. SITE AREA IS AS PER APPROVED ZONING PLAN.
6. ALL FLOOR PLANS AND BASEMENTS HAVE AUTOMATIC SPRINKLER SYSTEM FOR FIRE FIGHTING.
7. GATE AND BOUNDARY WALL AS PER STANDARD DETAIL.
8. COMPLETE BUILDING WILL BE CENTRALIZED AIR CONDITIONED AND MECHANICALLY VENTILATED WITH 100% POWER BACKUP.

PROJECT

REVISE BUILDING PLAN FOR SETTING UP OF COMMERCIAL COLONY OVER AN AREA MEASURING 8.9375 ACRES (LICENCE NO, 17 OF 2010 DATED 13.02.2010 AND LICENCE NO. 150 OF 2022 DATED 28.09.2022) IN THE COMMERCIAL BELT OF SECTOR 68, GURUGRAM BEING DEVELOPED BY REACH PROMOTERS PVT. LTD.

ARCHITECTS

ACPL

ISO 9001:2008

Architecture Management Planning

ACPL Design Ltd
www.acplonline.com
E-24 South Extension Tel+91 11 24632195
New Delhi 110049, India +91 11 24646709
E: contact@acplonline.com +91 11 24634069

This is a "PROVISIONAL BUILDING PLAN" approved only for the purpose of inviting objections from the general public

S.T.P (HQ) Member Secretary B.P.A.C. | S.T.P (G) Member B.P.A.C. | C.T.P (HQ) Chairman B.P.A.C.

DTP(HQ) | ATP(HQ)

J.D. | P.A. | A.P.P. | DINESH KUMAR PA(HQ)

KEY PLAN

ARCHITECT'S SEAL & SIGNATURE

RAVI KUMAR GARG
ARCHITECT
CA/2015/58473

OWNER'S SEAL & SIGNATURE

JDA(T)
MEMBER
BPAC

REACH PROMOTERS PVT. LTD.
Gurgaon

SCALE :- 1: 300

NORTH

DRG. TITLE :
GROUND FLOOR & GROUND COVERAGE (AREA CALCULATION PLAN)

DRAWING NO.
05A