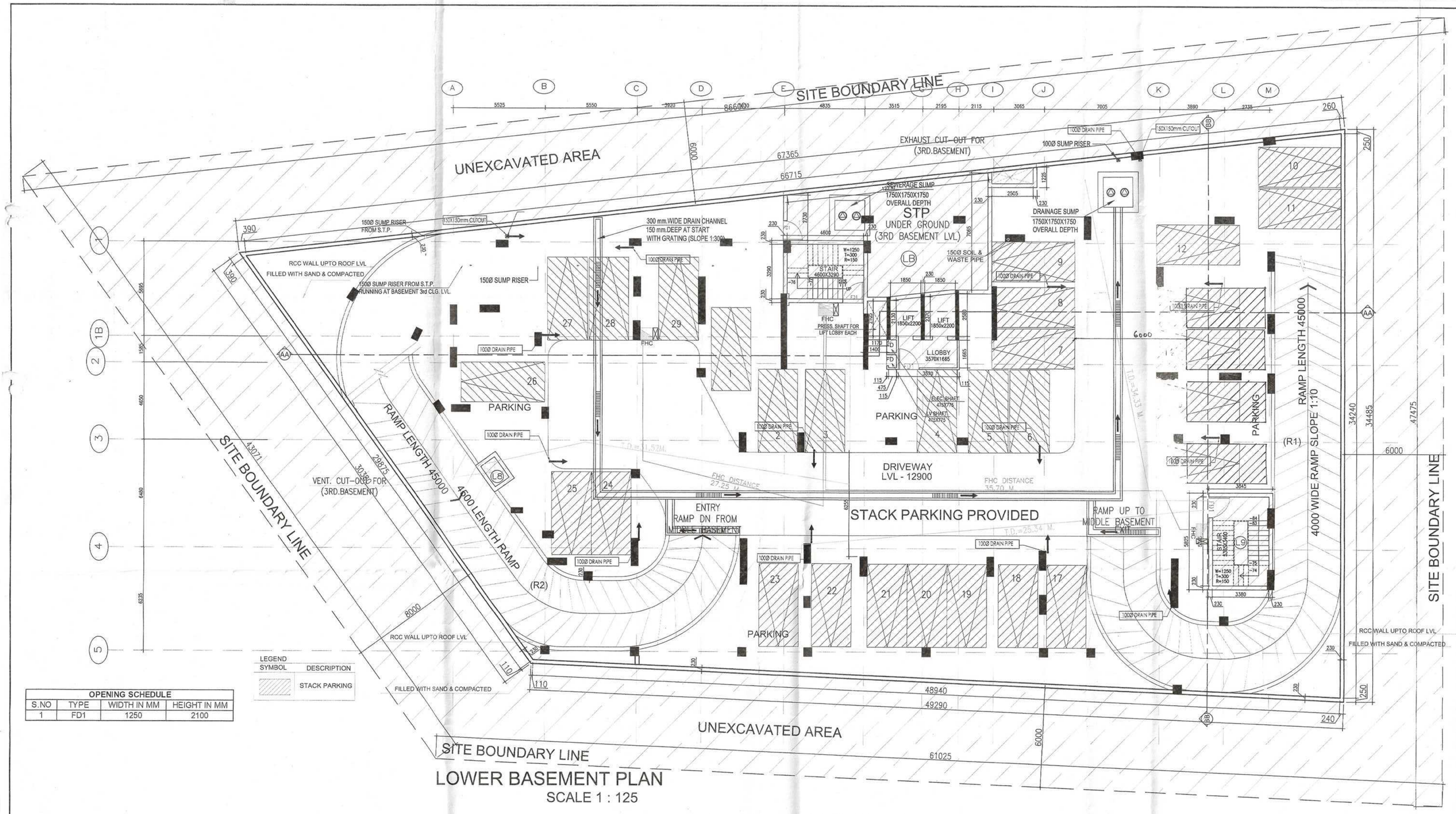

LOWER BASEMENT PLAN
SCALE 1 : 125

OPENING SCHEDULE			
S.NO	TYPE	WIDTH IN MM	HEIGHT IN MM
1	FD1	1250	2100

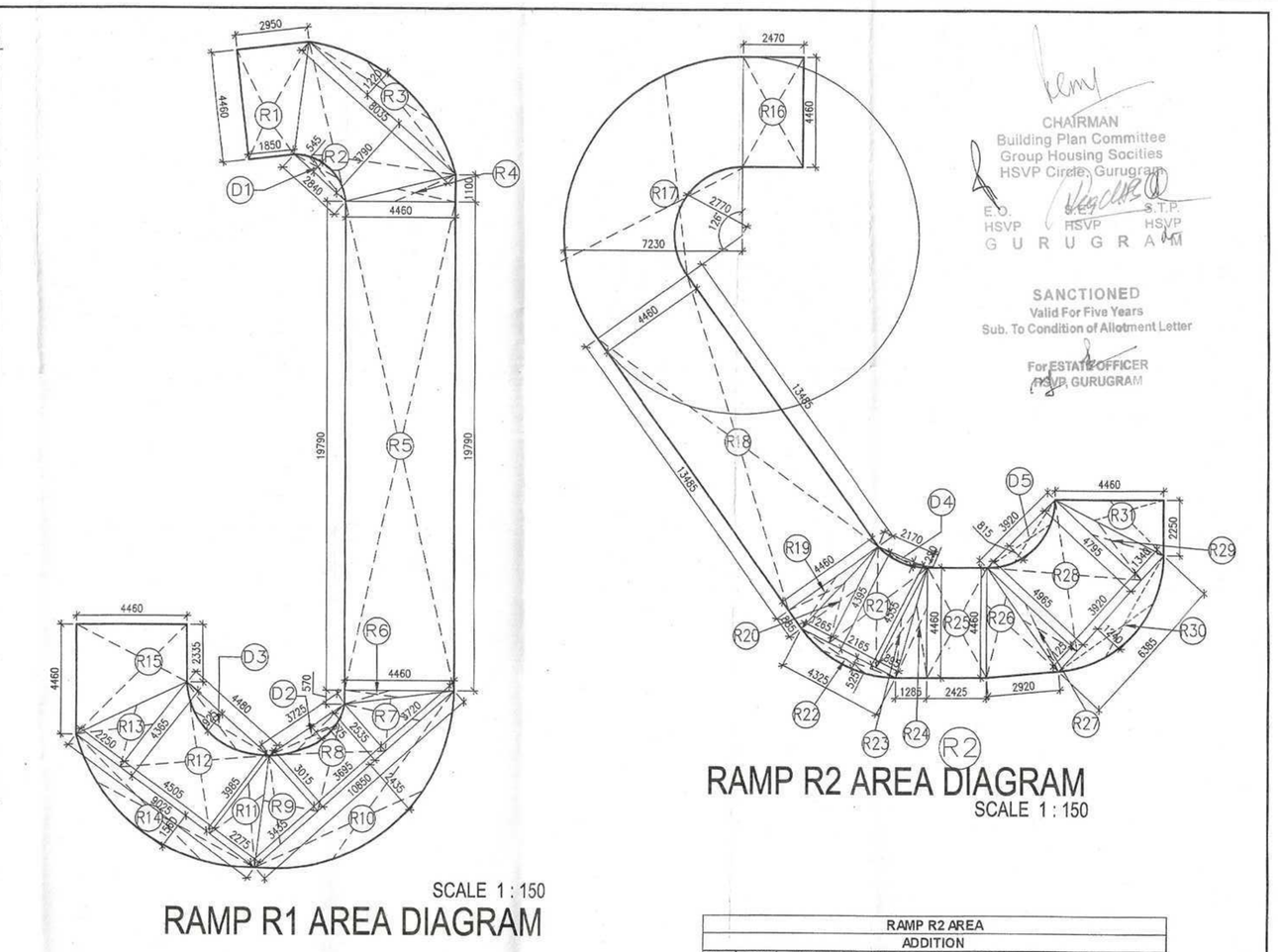

RAMP R2 AREA DIAGRAM
SCALE 1 : 150

RAMP R1 AREA DIAGRAM
SCALE 1 : 150

RAMP R1 AREA					
ADDITION					
S.NO	CODE	LENGTH IN M	WIDTH IN M	CALCULATION	AREA IN SQM
1	R1	1/2(2.950+1.850)	4.460	1/2(2.950+1.850)X4.460	10.704
2	R2	1/2(8.035+2.840)	3.790	1/2(8.035+2.840)X3.790	20.608
3	R3	8.035	1.220	2/3(8.035X1.220)	6.535
4	R4	4.460	1.100	1/2(4.460X1.100)	2.453
5	R5	19.790	4.460	19.790X4.460	88.263
6	R6	4.460	0.570	1/2(4.460X0.570)	1.271
7	R7	3.720	2.535	1/2(3.720X2.535)	4.715
8	R8	1/2(2.535+3.015)	3.695	1/2(2.535+3.015)X3.695	10.254
9	R9	3.015	3.435	1/2(3.015X3.435)	5.178
10	R10	10.850	2.435	2/3(10.850X2.435)	17.613
11	R11	3.985	2.275	1/2(3.985X2.275)	4.533
12	R12	1/2(3.985+4.365)	4.505	1/2(3.985+4.365)X4.505	18.608
13	R13	4.365	2.250	1/2(4.365X2.250)	4.911
14	R14	9.025	1.560	2/3(9.025X1.560)	9.386
15	R15	1/2(4.460+2.335)	4.460	1/2(4.460+2.335)X4.460	15.153
				TOTAL AREA (A)	220.385
DEDUCTION					
1	D1	2.840	0.545	2/3(2.840X0.545)	1.032
2	D2	3.725	0.675	2/3(3.725X0.675)	1.676
3	D3	4.480	0.925	2/3(4.480X0.925)	2.763
				TOTAL AREA (B)	5.471
				TOTAL AREA OF RAMP R1 (A-B)	214.914

RAMP R2 AREA					
ADDITION					
S.NO	CODE	LENGTH IN M	WIDTH IN M	CALCULATION	AREA IN SQM
1	R16	4.460	2.470	4.460X2.470	11.016
2	R17	3.14X(7.23)²-3.14(2.770)/360 X 126			49.015
3	R18	13.485	4.460	13.485X4.460	60.143
4	R19	4.460	0.885	1/2(4.460X0.885)	1.974
5	R20	4.395	1.265	1/2(4.395X1.265)	2.780
6	R21	1/2(4.395+4.555)	2.165	1/2(4.395+4.555)X2.165	9.888
7	R22	4.325	0.525	2/3(4.325X0.525)	1.514
8	R23	4.555	0.895	1/2(4.555X0.895)	2.038
9	R24	4.460	1.285	1/2(4.460X1.285)	2.868
10	R25	4.460	2.425	4.460X2.425	10.816
11	R26	4.460	2.920	1/2(4.460X2.920)	6.512
12	R27	4.965	1.125	1/2(4.965X1.125)	2.793
13	R28	1/2(4.965+4.795)	3.920	1/2(4.965+4.795)X3.920	19.130
14	R29	4.795	1.340	1/2(4.795X1.340)	3.213
15	R30	6.385	1.240	2/3(6.385X1.240)	5.278
16	R31	4.460	2.250	1/2(4.460X2.250)	5.018
				TOTAL AREA (A)	193.794
DEDUCTION					
1	D4	2.170	0.220	2/3(2.170X0.220)	0.318
2	D5	3.920	0.815	2/3(3.920X0.815)	2.130
				TOTAL AREA (B)	2.448
				TOTAL AREA OF RAMP R1 (A-B)	191.346

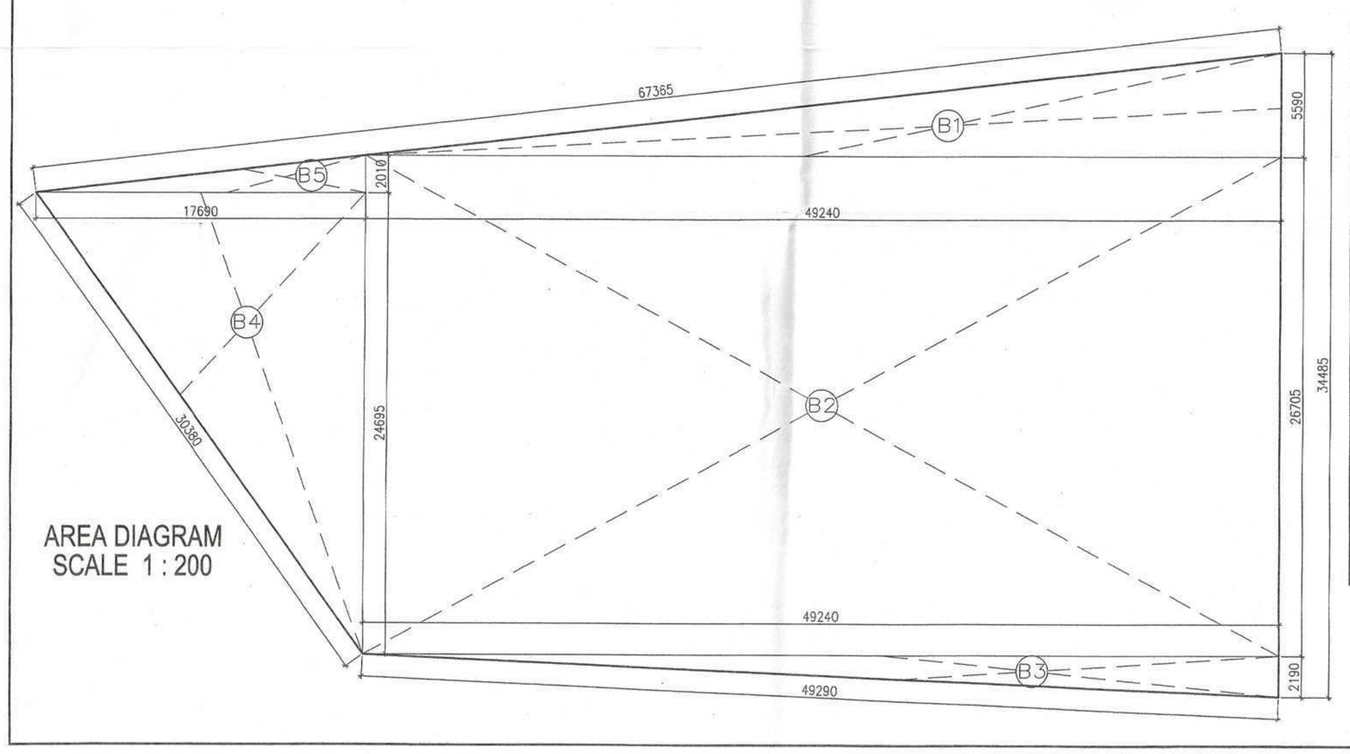

AREA DIAGRAM
SCALE 1 : 200

LOWER BASEMENT FLOOR AREA					
S.NO	CODE	LENGTH IN M	WIDTH IN M	CALCULATION	AREA IN SQM
1	B1	49.240	5.590	1/2x49.240x5.590	137.626
2	B2	49.240	26.705	49.240x26.705	1314.954
3	B3	49.240	2.190	1/2x49.240x2.19	53.918
4	B4	24.695	17.690	1/2x24.690x17.69	218.427
5	B5	2.010	17.690	1/2x2.0100x17.690	17.778
		TOTAL=B3			1742.703
		DEDUCTIONS			
S.NO	CODE	DESCRIPTION			AREA IN SQM
1	LB	STP AND SERVICE AREA			116.455
2	L8	CUT OUT			2.862
3	L9	ST2 (FIRE STAIR CASE)			22.397
4	R1	RAMP 1 (LENGTH OF RAMP-45M)			214.914
5	R2	RAMP2 (LENGTH OF RAMP-45M)			191.346
6		TOTAL=D			547.974
	NET PARKING AREA			B3-D	1194.729
	1 ECS= 32SQ.MT		32.000		
	TOTAL NO.OF PARKING =AREA/ 1ECS				37.335
					37 ECS

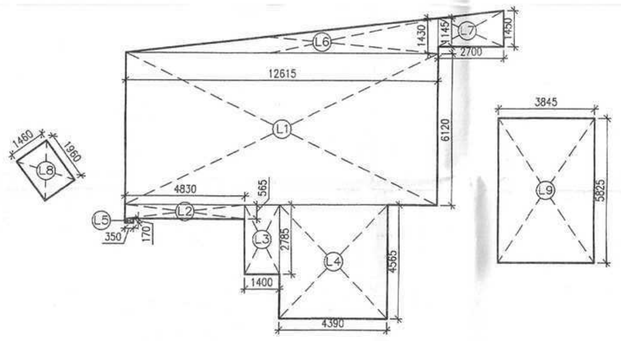

SERVICE AREA DIAGRAM
SCALE 1 : 150

LOWER BASEMENT FLOOR SERVICE AREA					
LOWER BASEMENT FLOOR SERVICE AREA					
S.NO	CODE	LENGTH IN M	WIDTH IN M	CALCULATION	AREA IN SQM
1	L1	12.615	6.120	12.615X6.120	77.204
2	L2	4.830	0.565	4.830X0.565	2.729
3	L3	2.785	1.400	2.785X1.400	3.899
4	L4	4.565	4.390	4.565X4.390	20.040
5	L5	0.350	0.170	0.350X0.170	0.060
6	L6	12.615	1.430	1/2(12.615X1.430)	9.020
7	L7	1/2(1.450+1.145)	2.700	1/2x(1.450+1.145)X2.700	3.503
				TOTAL AREA LB=	116.455
8	L8	1.960	1.460	1.960X1.460	2.862
9	L9	5.825	3.845	5.825X3.845	22.397

SUBMISSION DRAWING

PROJECT: BUILDING PLAN FOR GROUP HOUSING (GH1) AREA MEASURING 0.75989 ACRES IN SEC-23 & 23A, GURUGRAM BEING DEVELOPED BY M/S META DESIGN SOLUTIONS PVT. LTD.

ARCHITECT: DAULAT & PUNEET ARCHITECTS LLP. 408, Fourth Floor, Sun City Trade Tower, Sector - 21, Gurugram - 122016, E-MAIL: info@dnparchitects.com, Phone : +91-124-4229676. DHP ARCHITECTS LLP. Architecture Interior Planning Vastu

ARCHITECT: DAULAT & PUNEET ARCHITECTS LLP. GURUGRAM

OWNER: Meta Design Solutions Pvt. Ltd.

SCALE	1:125
DATE ISSUED	29/01/2024
DRAWN BY	VAIBHAV
CHECKED BY	DAULAT GARG

N

DRAWING: LOWER BASEMENT PLAN

DWG NO.: MDS/09