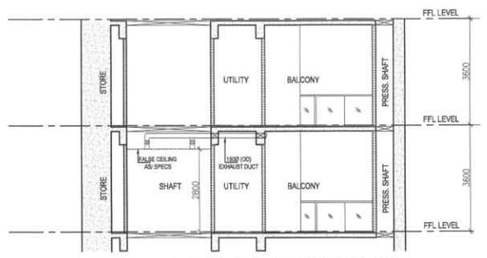

TYPICAL MECHANICAL VENTILATION SECTION 1 FOR W.C.

TYPICAL MECHANICAL VENTILATION CALCULATION FOR W.C.								
S.NO.	LOCATION	AREA	HEIGHT	VOLUME	DESIGN CFM	SELECTED EXHAUST FAN	FAN SIZE	EXHAUST DUCT SIZE
		(Sq.ft.)	(FL)	(Cu.ft.)	CFM		LXBXH (mm)	DIAMETER (mm)
1	TYPICAL MECHANICAL VENTILATION FOR W.C.							
1.1	1 W.C.	24.4	9.2	244	50	1# 100 cfm cassette Inline fan	270x270x171	150 (OD)
1.2	2 W.C.	24.4	9.2	244 x 2	50 x 2	1# 100 cfm cassette Inline fan	270x270x171	150 (OD)

LEGEND :-	
DESCRIPTION	SYMBOL
110 OD uPVC SOIL & VENT PIPE	1
110 OD uPVC WASTE & VENT PIPE	2
110 OD uPVC KITCHEN WASTE & VENT PIPE	2a
75 OD VENT PIPE (VP)	3
200 OD uPVC RAIN WATER PIPE	4
110 OD MOMENTY & BALCONY RAIN WATER PIPE	4a
110 OD UTILITY BALCONY RAIN WATER PIPE	4b
DOMESTIC WATER SUPPLY DN. TAKE	5
FLUSHING WATER SUPPLY DN. TAKE	6
DOMESTIC WATER SUPPLY RISER	7
FLUSHING WATER SUPPLY RISER	8
DOMESTIC WATER SUPPLY RISER TO SERVICE FLOOR	7a
FLUSHING WATER SUPPLY RISER TO SERVICE FLOOR	8a
DOMESTIC HYDRO-PNEUMATIC WATER SUPPLY PIPE DOWN TAKE UPPER 4 FLOORS	5a
PIPE DROOP	
FLOOR DRAIN (FD)	
FLOOR TRAP (FT)	
KHURRA 250x250mm. WITH SLOTTED GRATING	
KHURRA 450X450mm (TERRACE).	
BALCONY DRAIN PIPE	
DOMESTIC WATER SUPPLY (DWS)	
HYDROPNEUMATIC DOMESTIC WATER (HDDW)	
FLUSHING WATER SUPPLY (FWS)	
FLUSHING WATER SUPPLY RISER	
DOMESTIC WATER SUPPLY RISER	
100ø SOIL PIPE	
100ø WASTE PIPE	
75ø VENT PIPE	
RAIN WATER PIPE	
HEALTH FAUCET	H.F
ACCESS DOOR (AD)	
BALL VALVE / BUTTERFLEY VALVE	B.V
NON RETURN VALVE	N.R.V

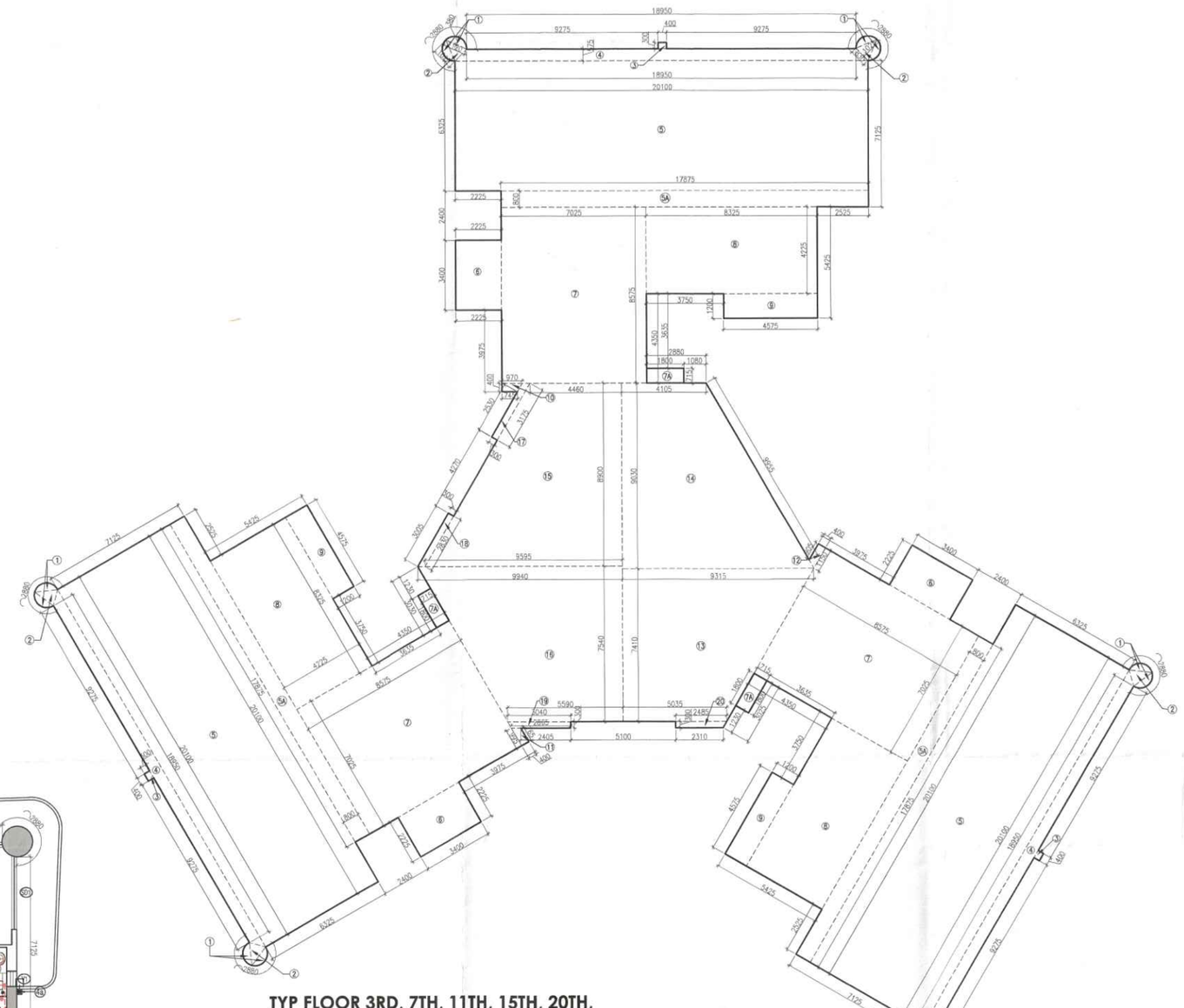

TYP FLOOR 3RD, 7TH, 11TH, 15TH, 20TH, 24TH, 28TH, 32ND & 36TH FLOOR AREA DIAGRAM

TYP FLOOR 3RD, 7TH, 11TH, 15TH, 20TH, 24TH, 28TH, 32ND & 36TH FLOOR PLAN (TOWER -A)

TYP 3RD, 7TH, 11TH, 15TH, 20TH, 24TH, 28TH, 32TH & 36TH FLOOR AREA CALCULATION						
ADDITION AREA						
S. No.	COEFF.	Dim (m)	X	Dim (m)	Nos.	Area (SQM)
1	0.667	1.120	X	0.380	12	3.407
2	0.5	1.025	X	0.830	6	2.552
3	1	0.300	X	0.400	3	0.360
4	(18.950+20.100)/2		X	0.575	3	33.681
5	1	20.100	X	6.325	3	381.398
5A	1	17.875	X	0.800	3	42.900
6	1	2.225	X	3.400	3	22.695
7	1	7.025	X	8.575	3	180.718
7A	1	1.800	X	0.715	3	3.861
8	1	8.325	X	4.225	3	105.519
9	1	4.575	X	1.200	3	16.470
10	(0.970+0.745)/2		X	0.400	1	0.343
11	(0.995+0.765)/2		X	0.400	1	0.352
12	(0.905+1.150)/2		X	0.400	1	0.411
13	(9.315+5.035)/2		X	7.410	1	53.167
14	(4.105+9.315)/2		X	9.030	1	60.591
15	(4.460+9.595)/2		X	8.900	1	62.545
16	(9.940+5.590)/2		X	7.540	1	58.548
17	(2.530+3.175)/2		X	0.300	1	0.856
18	(3.005+2.830)/2		X	0.300	1	0.875
19	(3.040+2.865)/2		X	0.300	1	0.881
20	(2.485+2.310)/2		X	0.300	1	0.719
FA	0.667	0.815	X	0.160	3	0.261
TOTAL ADDITION AREA (A)						1033.109
DEDUCTION AREA						
S. No.	COEFF.	Dim (m)	X	Dim (m)	Nos.	Area (SQM)
D1	1	1.825	X	0.450	3	2.464
D1A	1	1.825	X	0.975	3	5.338
D2	1	0.325	X	2.850	3	2.779
D3	1	2.125	X	0.450	3	2.869
D4	1	0.750	X	0.400	3	0.900
D5	0.5	1.070	X	1.850	1	0.990
D6	1	2.175	X	2.200	6	28.710
D6A	1	1.700	X	0.600	3	3.060
D7	0.5	1.090	X	1.915	1	1.044
D8	1	1.200	X	0.400	1	0.480
D9	1	1.570	X	0.400	1	0.628
D10	(3.175+3.700)/2		X	1.405	1	4.830
D11	0.5	2.110	X	1.230	1	1.298
D12	0.5	2.110	X	1.055	1	1.113
D13	(1.200+1.500)/2		X	0.520	1	0.702
D14	0.5	2.005	X	1.155	1	1.158
D15	(1.155+1.875)/2		X	1.250	1	1.894
D16	(2.660+1.410)/2		X	6.020	1	12.251
D17	0.5	6.120	X	3.040	1	9.302
D18	0.5	2.100	X	1.210	2	2.541
D19	(2.560+4.790)/2		X	3.860	1	14.186
D20	(1.230+4.790)/2		X	2.060	1	6.201
D21	(1.520+2.600)/2		X	0.620	1	1.277
D22	1	2.600	X	2.095	1	5.447
D23	1	2.100	X	3.200	1	6.720
D24	(1.755+1.195)/2		X	0.975	1	1.438
D25	0.5	1.120	X	1.945	1	1.089
D26	0.5	1.775	X	1.025	1	0.910
D27	0.5	1.850	X	1.070	1	0.990
D28	1	5.050	X	5.150	3	78.023
D29	(5.150+4.575)/2		X	0.575	3	8.388
D30	0.5	6.260	X	3.035	1	9.500
D31	(0.650+4.415)/2		X	5.800	1	14.689
D32	1	0.600	X	4.415	1	2.649
D33	0.5	5.960	X	2.980	1	8.880
D34	1	4.300	X	1.925	3	24.833
TOTAL DEDUCTION AREA (D)						269.566
TOTAL NET F.A.R AREA (F1 - D1) = F						763.543
TOTAL NON FAR AREA (N)						59.147
TOTAL BUILTUP AREA (F +N)						822.690

TYP FLOOR 3RD, 7TH, 11TH, 15TH, 20TH, 24TH, 28TH, 32ND & 36TH FLOOR DEDUCTION AREA DIAGRAM

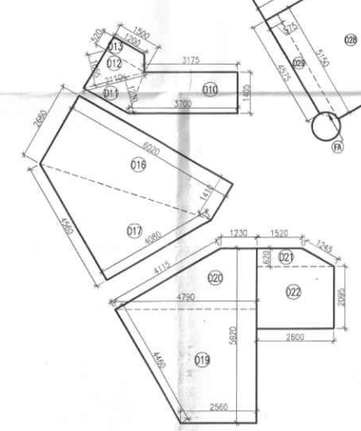

NON FAR AREA DIAGRAM

TYP 3RD, 7TH, 11TH, 15TH, 20TH, 24TH, 28TH, 32TH & 36TH NON FAR AREA CALCULATION						
D10	(3.175+3.700)/2		X	1.405	1	4.830
D11	0.5	2.110	X	1.230	1	1.298
D12	0.5	2.110	X	1.055	1	1.113
D13	(1.200+1.500)/2		X	0.520	1	0.702
D16	(2.660+1.410)/2		X	6.020	1	12.251
D17	0.5	6.120	X	3.040	1	9.302
D18	0.5	2.100	X	1.210	2	2.541
D19	(2.560+4.790)/2		X	3.860	1	14.186
D20	(1.230+4.790)/2		X	2.060	1	6.201
D21	(1.520+2.600)/2		X	0.620	1	1.277
D22	1	2.600	X	2.095	1	5.447
TOTAL NON FAR AREA						59.147

FIRE LEGEND:-
A. 0000 FIRE HYDRANT PIPE ZONE 1.
A1. 0000 FIRE HYDRANT PIPE ZONE 2.
A2. 0000 FIRE HYDRANT PIPE ZONE 3.
A3. 0000 FIRE HYDRANT PIPE ZONE 4.
C1A 1500 ALTERNATE SPRINKLER PIPE FOR ZONE 1.
C2A 1500 ALTERNATE SPRINKLER PIPE FOR ZONE 2.
C3A 1500 ALTERNATE SPRINKLER PIPE FOR ZONE 3.
C4A 1500 ALTERNATE SPRINKLER PIPE FOR ZONE 4.
B. 0000 DRAIN PIPE
C1 1500 FIRE SPRINKLER PIPE FOR ZONE 1.
C2 1500 FIRE SPRINKLER PIPE FOR ZONE 2.
C3 1500 FIRE SPRINKLER PIPE FOR ZONE 3.
C4 1500 FIRE SPRINKLER PIPE FOR ZONE 4.
D. 0000 MAKE UP LINE
FHC FIRE HOSE CABINET

FLOORS	LEVLES
3rd FLOOR	13500
7th FLOOR	27900
11th FLOOR	42300
15th FLOOR	56700
20th FLOOR	74100
24th FLOOR	88500
28th FLOOR	102900
32nd FLOOR	117300
36th FLOOR	131700

TYPICAL DOOR WINDOW SCHEDULE				
NAME	WIDTH	HEIGHT	CILL	LINTEL
D1	1500	2400	0	2400
D2	1000	2400	0	2400
D3	800	2400	0	2400
W1	2000	1800	600	2400
V1	600	1200	1200	2400
SD1	2750	2400	0	2400
SD2	4300	2400	0	2400
SD3	1350	2400	0	2400
SD4	1675	2400	0	2400
SD5	4575	2400	0	2400
SD6	3500	2400	0	2400
SD7	4150	2400	0	2400
DW1	1750	2400	00/1050	2400
G1	4150	2400	0	2400
G2	3500	2400	0	2400
G3	4300	2400	0	2400
G4	2800	2400	0	2400
G5	4575	2400	0	2400
GD1	4110	5100	0	5100
FD1	1200	2400	0	2400
FD2	1250	2400	0	2400
FD3	1500	2400	0	2400
FH	900	2400	0	2400
GS2	2400	1500	0	2400

ALL MAIN UNIT DOOR – ONE HR FIRE RATING

S.T.P.(NO) Member Secretary B.P.A.C. S.T.P.(G) Member B.P.A.C. C.T.P.(HR) Chairman B.P.A.C.

DTP(HQ) AD PA ATP ATP(HQ)

Checked as per Public Health (Internal) Subject to comments in in forwarding No. 3812 dt 30/11/24

Chief Engineer (HQ) Haryana, Panchkula

SANCTIONED TO BE READ WITH THIS OFFICE MEMO NO. 4222 DATED: 31/01/2025

DDT (T) MEMBER BPAC

Ram Avtar Bassi JD(HQ)

PROJECT NAME :-

TRINITY SKY PALAZZOS

PROJECT :-

PROPOSED BUILDING PLAN OF GROUP HOUSING MEASURING 10.84375 ACRES (LICENCE NO. 130 OF 2024 DATED 24.10.2024) IN SECTOR-88B, GURUGRAM MANESAR URBAN COMPLEX BEING DEVELOPED BY FIDATOCITY HOMES PVT. LTD. AND OTHER'S IN COLLABORATION WITH FIDATOCITY HOMES PVT. LTD.

PRINCIPAL ARCHITECTS :-

ACPL Design Ltd

CONSULTING ARCHITECTS

SACHDEVA CONSULTANTS.

ARCHITECT'S SEAL & SIGNATURE

KULMEET SNANGARI ARCHITECT CA/91/21741

OWNER'S SEAL & SIGNATURE

For Fidatocity Homes Pvt. Ltd.

Director/Authorised Signatory

Scale : 1 : 100

Drawing Title:- TYP FLOOR 3RD, 7TH, 11TH, 15TH, 20TH, 24TH, 28TH, 32ND & 36TH FLOOR PLAN TOWER-A

Drawing No:- 8