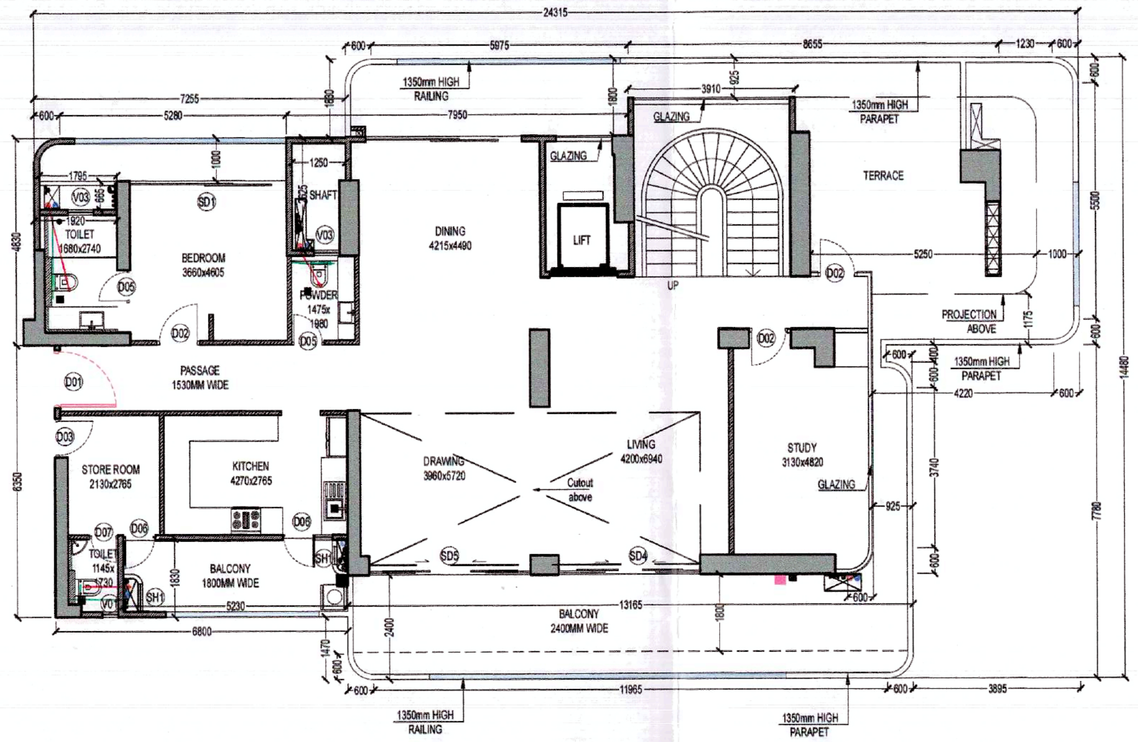

01 PENTHOUSE LOWER (TA) UNIT PLAN

Scale:1:100

TOILET DETAIL TYPICAL

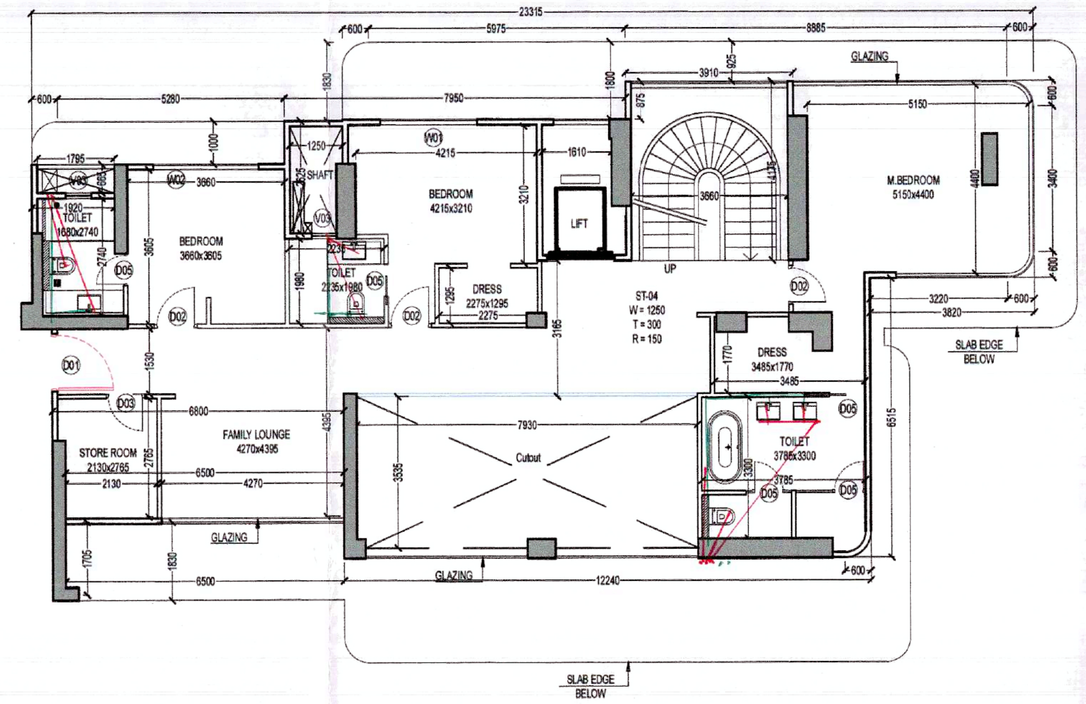

02 PENTHOUSE UPPER (TA) UNIT PLAN

Scale:1:100

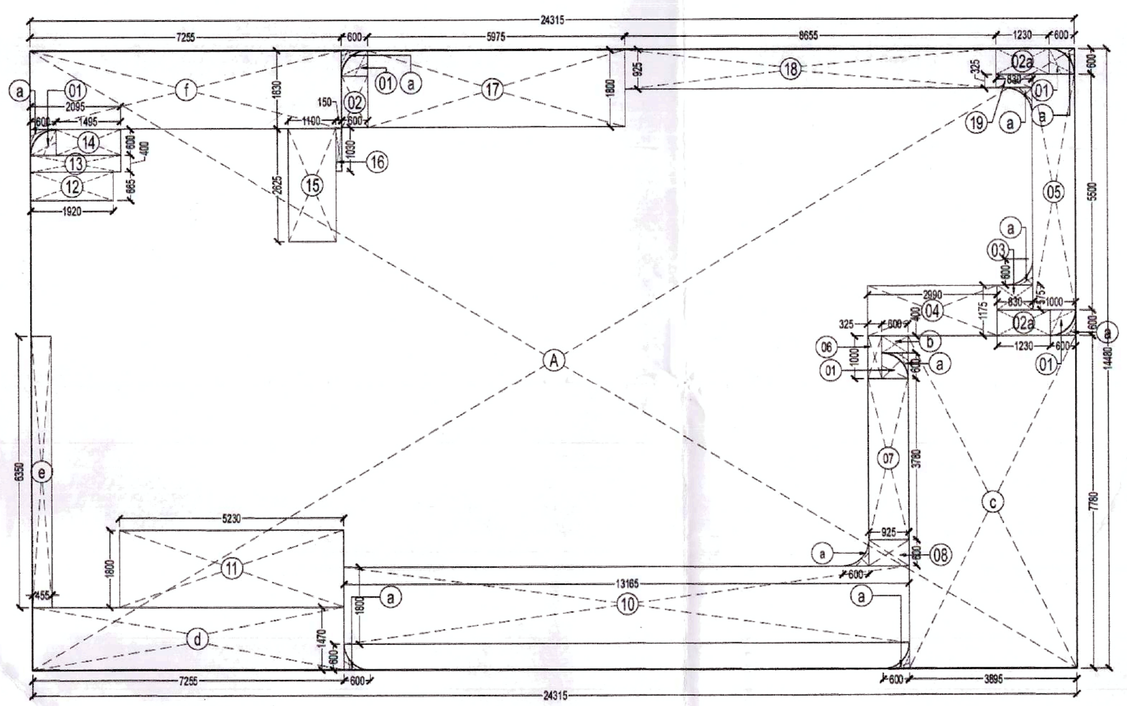

01 PENTHOUSE LOWER (TA) UNIT AREA DIAGRAM

Scale:1:100

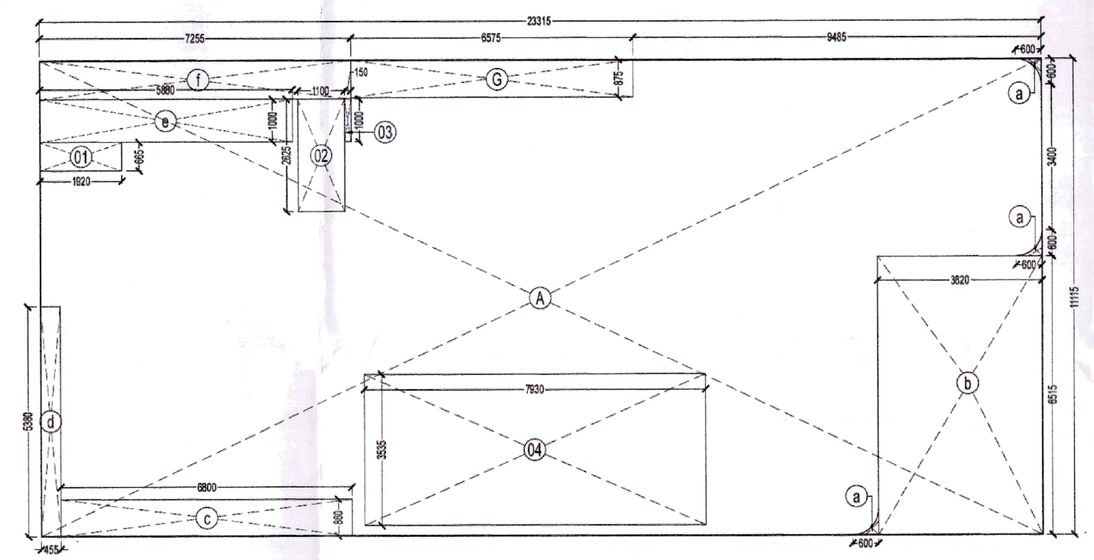

01 PENTHOUSE UPPER (TA) UNIT AREA DIAGRAM

Scale:1:100

PENTHOUSE (A) LOWER UNIT FAR DETAIL								
1. ADDITION – XX								
NAME	SHAPE	LENGTH (L)	WIDTH (B)	HEIGHT (H)	FORMULA	AREA	QUANTITY	TOTAL AREA (Sq.Mts.)
A	Rectangle	24.315	14.480	-	L X B	352.081	1	352.081
							1. TOTAL ADDITION	352.081
2. DEDUCTION - YY								
a	Area of polyline					0.077	10	0.770
b	Rectangle	0.600	0.400	-	L X B	0.240	1	0.240
c	Rectangle	7.780	3.895	-	L X B	30.303	1	30.303
d	Rectangle	7.255	1.470	-	L X B	10.665	1	10.665
e	Rectangle	6.350	0.455	-	L X B	2.889	1	2.889
f	Rectangle	7.255	1.830	-	L X B	13.277	1	13.277
1	Quadrant	0.600	-	-	3.14 x B X H	0.283	7	1.978
2	Rectangle	1.200	0.600	-	L X B	0.720	1	0.720
2a	Rectangle	1.230	0.600	-	L X B	0.738	3	2.214
3	Rectangle	0.830	0.575	-	L X B	0.477	1	0.477
4	Rectangle	2.990	1.175	-	L X B	3.513	1	3.513
5	Rectangle	1.000	5.500	-	L X B	5.500	1	5.500
6	Rectangle	0.325	1.000	-	L X B	0.325	1	0.325
7	Rectangle	0.925	3.780	-	L X B	3.497	1	3.497
8	Rectangle	0.925	0.600	-	L X B	0.555	1	0.555
9	Rectangle	4.185	0.600	-	L X B	2.511	1	2.511
10	Rectangle	13.185	1.800	-	L X B	23.697	1	23.697
11	Rectangle	5.230	1.800	-	L X B	9.414	1	9.414
12	Rectangle	1.920	0.665	-	L X B	1.277	1	1.277
13	Rectangle	2.095	0.400	-	L X B	0.838	1	0.838
14	Rectangle	1.495	0.600	-	L X B	0.897	1	0.897
15	Rectangle	1.100	2.625	-	L X B	2.888	1	2.888
16	Rectangle	0.150	1.000	-	L X B	0.150	1	0.150
17	Rectangle	5.975	1.800	-	L X B	10.755	1	10.755
18	Rectangle	8.655	0.925	-	L X B	8.006	1	8.006
19	Rectangle	0.830	0.325	-	L X B	0.270	1	0.270
							2. TOTAL DEDUCTION	137.625
TOTAL FAR OF PENTHOUSE (A) LOWER UNIT					ADDITION (XX) - DEDUCTION (YY)			214.456
								SQM.

PENTHOUSE (A) UPPER UNIT FAR DETAIL								
1. ADDITION – XX								
NAME	SHAPE	LENGTH (L)	WIDTH (B)	HEIGHT (H)	FORMULA	AREA	QUANTITY	TOTAL AREA (Sq.Mts.)
A	Rectangle	23.315	11.115	-	L X B	259.146	1	259.146
							1. TOTAL ADDITION	259.146
2. DEDUCTION - YY								
a	Area of polyline					0.077	3	0.231
b	Rectangle	3.820	6.515	-	L X B	24.887	1	24.887
c	Rectangle	6.800	0.860	-	L X B	5.848	1	5.848
d	Rectangle	0.455	5.380	-	L X B	2.448	1	2.448
e	Rectangle	5.880	1.000	-	L X B	5.880	1	5.880
f	Rectangle	7.255	0.905	-	L X B	6.566	1	6.566
g	Rectangle	6.575	0.875	-	L X B	5.753	1	5.753
1	Rectangle	1.920	0.665	-	L X B	1.277	1	1.277
2	Rectangle	1.100	2.625	-	L X B	2.888	1	2.888
3	Rectangle	0.150	1.000	-	L X B	0.150	1	0.150
4	Rectangle	7.930	3.535	-	L X B	28.033	1	28.033
							2. TOTAL DEDUCTION	83.960
TOTAL FAR OF PENTHOUSE (A) UPPER UNIT					ADDITION (XX) - DEDUCTION (YY)			175.186
								SQM.

PENTHOUSE (A) LOWER UNIT B.U.A. DETAIL								
1. ADDITION – XX								
NAME	SHAPE	LENGTH (L)	WIDTH (B)	HEIGHT (H)	FORMULA	AREA	QUANTITY	TOTAL AREA (Sq.Mts.)
A	Rectangle	24.315	14.480	-	L X B	352.081	1	352.081
							1. TOTAL ADDITION	352.081
2. DEDUCTION - YY								
a	Area of polyline					0.077	10	0.770
b	Rectangle	0.600	0.400	-	L X B	0.240	1	0.240
c	Rectangle	7.780	3.895	-	L X B	30.303	1	30.303
d	Rectangle	7.255	1.470	-	L X B	10.665	1	10.665
e	Rectangle	6.350	0.455	-	L X B	2.889	1	2.889
f	Rectangle	7.255	1.830	-	L X B	13.277	1	13.277
							2. TOTAL DEDUCTION	58.144
TOTAL B.U.A. OF PENTHOUSE (A) LOWER UNIT					ADDITION (XX) - DEDUCTION (YY)			293.937
								SQM.

PENTHOUSE (A) UPPER UNIT B.U.A. DETAIL								
1. ADDITION – XX								
NAME	SHAPE	LENGTH (L)	WIDTH (B)	HEIGHT (H)	FORMULA	AREA	QUANTITY	TOTAL AREA (Sq.Mts.)
A	Rectangle	23.315	11.115	-	L X B	259.146	1	259.146
							1. TOTAL ADDITION	259.146
2. DEDUCTION - YY								
a	Area of polyline					0.077	3	0.231
b	Rectangle	3.820	6.515	-	L X B	24.887	1	24.887
c	Rectangle	6.800	0.860	-	L X B	5.848	1	5.848
d	Rectangle	0.455	5.380	-	L X B	2.448	1	2.448
e	Rectangle	5.880	1.000	-	L X B	5.880	1	5.880
f	Rectangle	13.830	0.905	-	L X B	12.516	1	12.516
4	Rectangle	7.930	3.535	-	L X B	28.033	1	28.033
							2. TOTAL DEDUCTION	79.543
TOTAL B.U.A. OF PENTHOUSE (A) UPPER UNIT					ADDITION (XX) - DEDUCTION (YY)			179.303
								SQM.

SANCTIONED
VIDE MEMO No. 328845 DATED 5.12.2024

Checked and found o... (Internal) Service... only subject to conforming w... in forwarding letter No. 338886 Dt 24.10.2024

Superintending Engineer (HQ) Chief Engineer SVP Panel

PLUMBING LEGEND:-	
1	100Ø SOIL PIPE
1	100Ø WASTE PIPE
1	150Ø SOIL PIPE
2	150Ø WASTE PIPE
2a	100Ø WASTE PIPE FOR KITCHEN
3	75Ø VENT PIPE
4	200Ø RAIN WATER PIPE
4	150Ø RAIN WATER PIPE
4b	75Ø UTILITY BALCONY DRAIN PIPE
4b	75Ø BALCONY RAIN WATER PIPE
5	DOM. WATER SUPPLY LINE
5a	DOM. HYDRO. WATER SUPPLY PIPE TOP 4 FLOORS
6	FLT. WATER SUPPLY LINE
7	DOMESTIC WATER TANK FILLING RISER (FOR TOPTERRACE)
8	FLUSHING WATER TANK FILLING RISER (FOR TOP TERRACE)
9	DOMESTIC WATER TANK FILLING RISER (FOR SERVICE FLOOR-MID LVL)
10	FLUSHING WATER TANK FILLING RISER (FOR SERVICE FLOOR-MID LVL)
AD	ACCESS DOOR
DP	DRAIN PROVISION
FD	FLOOR DRAIN
	KHURRA 230x230 IN CORRIDOR
	KHURRA 450x450 IN TERRACE
	BUTTERFLY VALVE
	STRAINER
	DROP
	RISE
	NON RETURN VALVE

DTP (HQ) Member Secretary BPAC — STP (HQ) Member BPAC — CTP Chairman BPAC

Suraj Bhan J.D.

SUBMISSION DRAWINGS

GENERAL NOTES :
1. DRAWINGS IN PL & FF SERIES REPRESENTS PLUMBING AND FIRE SUPPRESSION SYSTEM.
2. IN CASE OF ANY DISCREPANCY IT SHOULD BE BROUGHT TO THE NOTICE OF ARCHITECT / PROJECT MANAGER / CONSULTANT.
3. DRAWING SHOULD NOT BE SCALED. ONLY WRITTEN DIMENSIONS TO BE FOLLOWED.
4. THIS DRAWING SHOULD BE READ IN CONJUNCTION WITH RELEVANT ARCHITECTURAL LAND, SCAPING, STRUCTURAL AND OTHER SERVICES DRAWING.
5. ALL SERVICES SHAQFTS WILL BE SEALED AT EVERY FLOOR LEVEL ADPER INSTALLING SERVICES.
NOTES :
WHEREVER DEFINED RESTAURANT/FOOD COURT PLANED PLEASE PROVIDE MIN. 450MM SUNK REQUIRED.

FIRE LEGEND:-	
A.	100Ø HYDRANT PIPE FOR LOWER ZONE
A1.	100Ø HYDRANT PIPE FOR UPPER ZONE
B.	80Ø DRAIN PIPE
C.	150Ø SPRINKLER PIPE FOR LOWER ZONE
C1.	150Ø SPRINKLER PIPE FOR UPPER ZONE
D.	100Ø FIRE HYDRANT MAKE UP PIPE
FHC	FIRE HOSE CABINET
FLD	FLOOR DRAIN

DDTP (HQ) Member Secretary BPAC

DOOR WINDOW SCHEDULE - TOWER				
Type	Opening Size	Critical Level	Location	Remarks
D	1500x2410	992460	BASEMENT LIFT LOBBY	1 HOUR FIRE RATED
D21	1200x2410	992760	UNIT ENTRANCE	1 HOUR FIRE RATED
D32	1000x2410	992460	BEDROOM	Wooden flush door
D33	900x2410	992460	STORE ROOM	Wooden flush door
D34	900x2410	992460	S. ROOM / STUDY ROOM	Wooden flush door
D35	750x2410	992460	TOILET	Wooden flush door
D36	750x2100	992760	KITCHEN, STORE ROOM	UPVC
D37	650x2410	992460	STORE TOILET	Wooden flush door
W01	2250x2410	993270 0	BEDROOM	OPENABLE UPVC
W02	3400x2410	993270 0	MASTER BEDROOM , BED ROOM	OPENABLE UPVC
V01	500x1200	1210 0400	TOILET	OPENABLE UPVC
V02	450x1200	1210 0400	STORE TOILET	OPENABLE UPVC
V03	600x1200	1200 0400	TOILET	OPENABLE UPVC
SW1	2400x2700	1150 2700	KITCHEN	OPENABLE UPVC
SW2	1800x2700	1150 2700	KITCHEN	OPENABLE UPVC
SD1	5730x2700	0 0 2700	LIVING/DINING	SLIDING UPVC
SD2	1600x2700	0 0 2700	BEDROOM	SLIDING UPVC
SD3	2430x2700	0 0 2700	BEDROOM	SLIDING UPVC
SD4	3120x2700	0 0 2700	MASTER BEDROOM	SLIDING UPVC
SD5	3750x2700	0 0 2700	DRAWING	SLIDING UPVC
SD6	2960x2700	0 0 2700	BEDROOM	SLIDING UPVC
SD7	5310x2700	0 0 2700	DRAWING/DINING	SLIDING UPVC
LD1	1800x2700	0 0 2700	LOBBY	AS VENDOR
FD1	1200x2400	0 0 2400	STAIRCASE	1 HOUR FIRE RATED
FD2	1100x2700	0 0 2400	LIFT LOBBY	1 HOUR FIRE RATED
FD3	900x2400	0 0 2400	ELECTRICAL ROOM	2 HOUR FIRE RATED
FD4	750x2400	4000 2400	LV SHAFT	2 HOUR FIRE RATED
FD5	900x1800	9000 3400	PHC	2 HOUR FIRE RATED
FD6	2500x2400	9 0 2400	BASEMENT ELE. SERVICE ROOMS	2 HOUR FIRE RATED
FD7	1200x2400	9 0 2400	FIRE CONTROL ROOM	2 HOUR FIRE RATED

Note: Above mentioned opening size are from structural wall to wall.

PRINCIPAL ARCHITECT:

DESIGN FORUM INTERNATIONAL

K47, KAILASH COLONY, NEW DELHI - 110048
PHONE NO. 011-46556600

ARCHITECT'S SIGNATURE

A. VIKKEY Ref. No. 3324 JMD Tower Sec-14, Gurugram CA-2017-60299

OWNER'S SIGNATURE

AHIR INFRASPACE PVT. LTD. AIPL HARYANA

CLIENT:

M/S AHIR INFRASPACE PRIVATE LIMITED
10th Floor, Grand View Tower, Golf Course Extension Road
Sector 58 - Gurgaon- 122011

JD (H) DTP (H) STP (H) (MEMBER) B.P.A.C.

PROJECT:

PROPOSED GROUP HOUSING SITE NO. 25
IN SECTOR -53 GURUGRAM - HARYANA

DRAWING TITLE:

PENTHOUSE UPPER & LOWER UNIT PLAN (TA) AND AREA DIAGRAM WITH AREA CALCULATIONS

SCALE: AS SHOWN

DATE: 24.07.2024

NORTH

SHEET NO. 10A