SANCTIONED
VIDE MEMO No. 328895
DATED 5.12.2024

Checked and found (Internal) Service duly adhered to comments in in forwarding letter No. 393876 dt. 24/10/2024
Sr. Manager (A) O/o CHIEF ARCHITECT HSVP Panchkula

SUBMISSION DRAWINGS

GENERAL NOTES :
1. DRAWINGS IN PL & FF SERIES REPRESENTS PLUMBING AND FIRE SUPPRESSION SYSTEM.
2. IN CASE OF ANY DISCREPANCY IT SHOULD BE BROUGHT TO THE NOTICE OF ARCHITECT / PROJECT MANAGER / CONSULTANT.
3. DRAWING SHOULD NOT BE SCALED. ONLY WRITTEN DIMENSIONS TO BE FOLLOWED.
4. THIS DRAWING SHOULD BE READ IN CONJUNCTION WITH RELEVANT ARCHITECTURAL LAND, SCAPING, STRUCTURAL AND OTHER SERVICES DRAWING.
5. ALL SERVICES SHAFTS WILL BE SEALED AT EVERY FLOOR LEVEL AFTER INSTALLING SERVICES.

NOTES :
WHEREVER DEFINED RESTAURANT/FOOD COURT PLANED PLEASE PROVIDE MIN. 450MM SUNK REQUIRED.

PLUMBING LEGEND:-

1	100Ø SOIL PIPE
1	100Ø WASTE PIPE
1	150Ø SOIL PIPE
2	150Ø WASTE PIPE
2a	100Ø WASTE PIPE FOR KITCHEN
3	75Ø VENT PIPE
4	200Ø RAIN WATER PIPE
4	150Ø RAIN WATER PIPE
4a	75Ø UTILITY BALCONY DRAIN PIPE
4b	75Ø BALCONY RAIN WATER PIPE
5	DOM. WATER SUPPLY LINE
5a	DOM. HYDRO. WATER SUPPLY PIPE TOP 4 FLOORS
6	FLU. WATER SUPPLY LINE
7	DOMESTIC WATER TANK FILLING RISER (FOR TOP TERRACE)
8	FLUSHING WATER TANK FILLING RISER (FOR TOP TERRACE)
9	DOMESTIC WATER TANK FILLING RISER (FOR SERVICE FLOOR-MID LVL)
10	FLUSHING WATER TANK FILLING RISER (FOR SERVICE FLOOR-MID LVL)
AD	ACCESS DOOR
DP	DRAIN PROVISION
FD	FLOOR DRAIN
	KHURRA 250x250 IN CORRIDOR
	KHURRA 450x450 IN TERRACE
	BUTTERFLY VALVE
	STRAINER
	DROP
	RISE
	NON RETURN VALVE

FIRE LEGEND: –

A.	100Ø HYDRANT PIPE FOR LOWER ZONE
A1.	100Ø HYDRANT PIPE FOR UPPER ZONE
B.	80Ø DRAIN PIPE
C.	150Ø SPRINKLER PIPE FOR LOWER ZONE
C1.	150Ø SPRINKLER PIPE FOR UPPER ZONE
D.	100Ø FIRE HYDRANT MAKE UP PIPE
FHC	FIRE HOSE CABINET
FLD	FLOOR DRAIN

DTP (HQ) Member Secretary BPAC — STP (HQ) Member BPAC — CTP Chairman BPAC

Suraj Bhan
J.D.

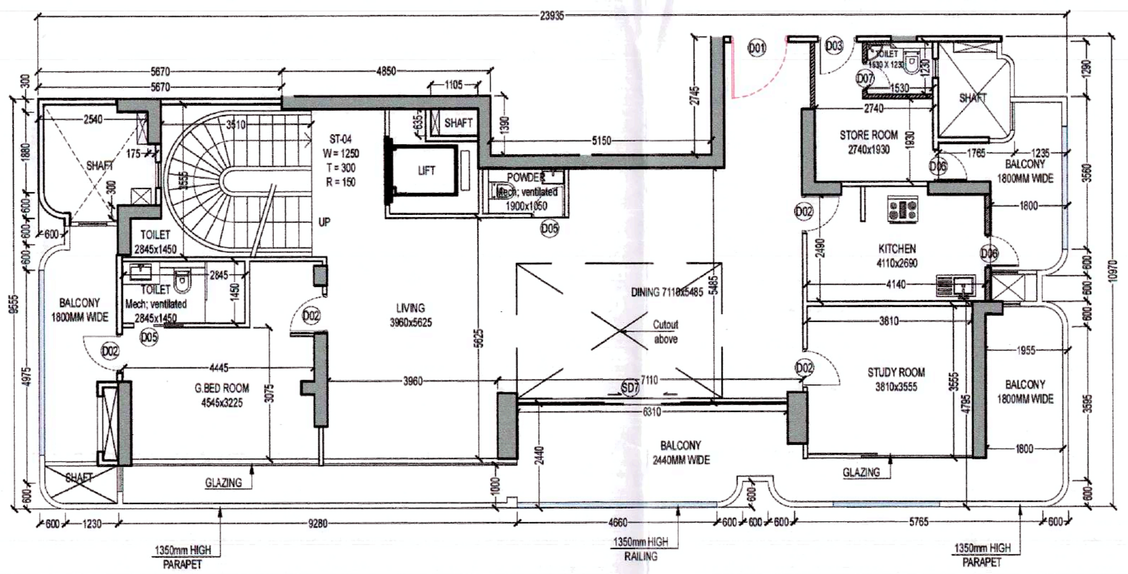

01 PENTHOUSE LOWER (TB) UNIT PLAN
Scale:1:100

TOILET DETAIL TYPICAL

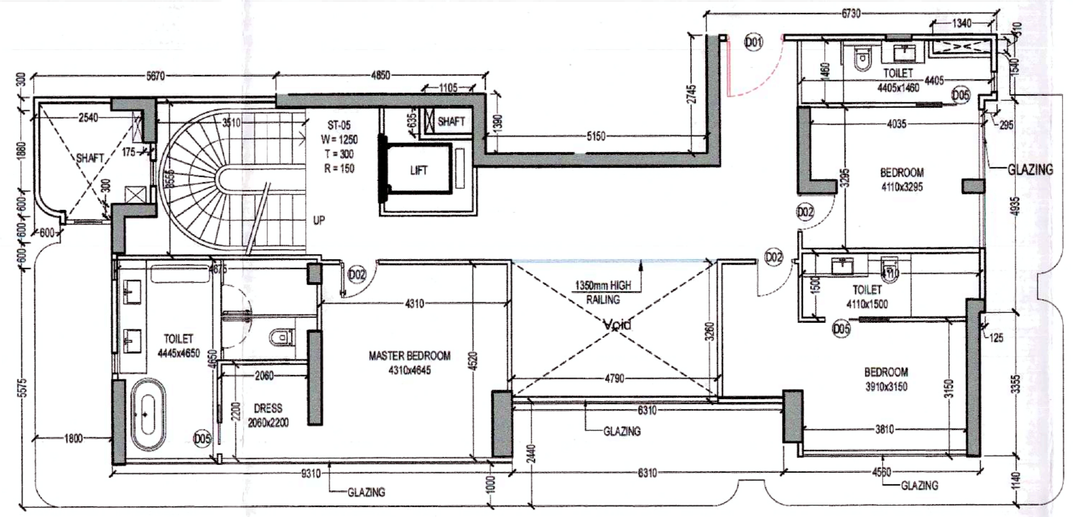

02 PENTHOUSE UPPER (TB) UNIT PLAN
Scale:1:100

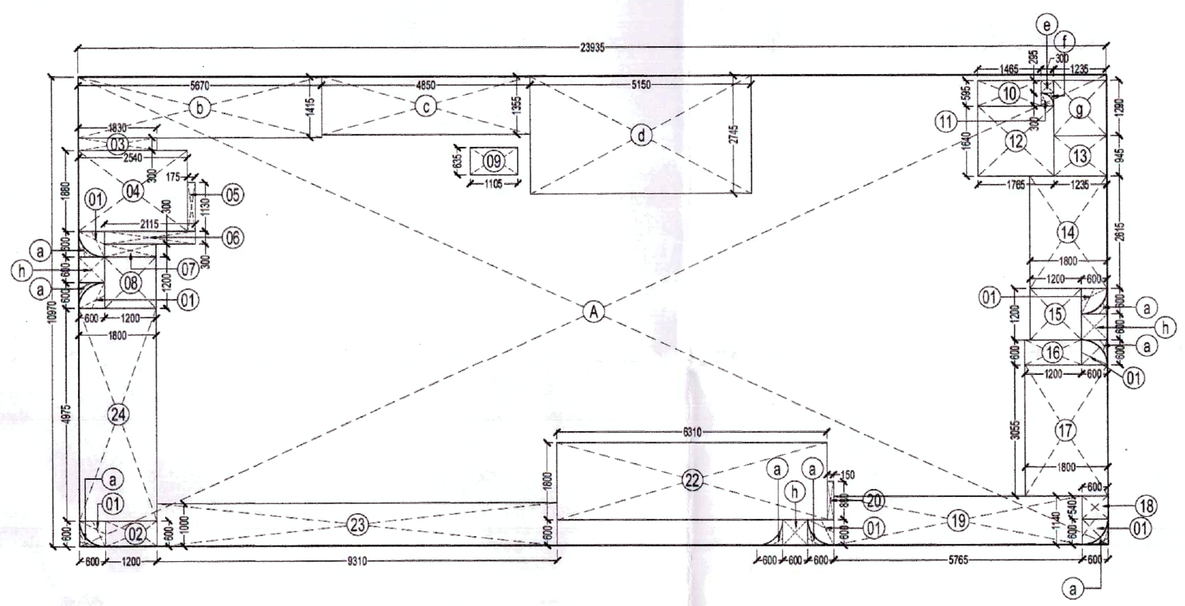

01 PENTHOUSE LOWER (TA) UNIT AREA DIAGRAM
Scale:1:100

TOILET DETAIL TYPICAL

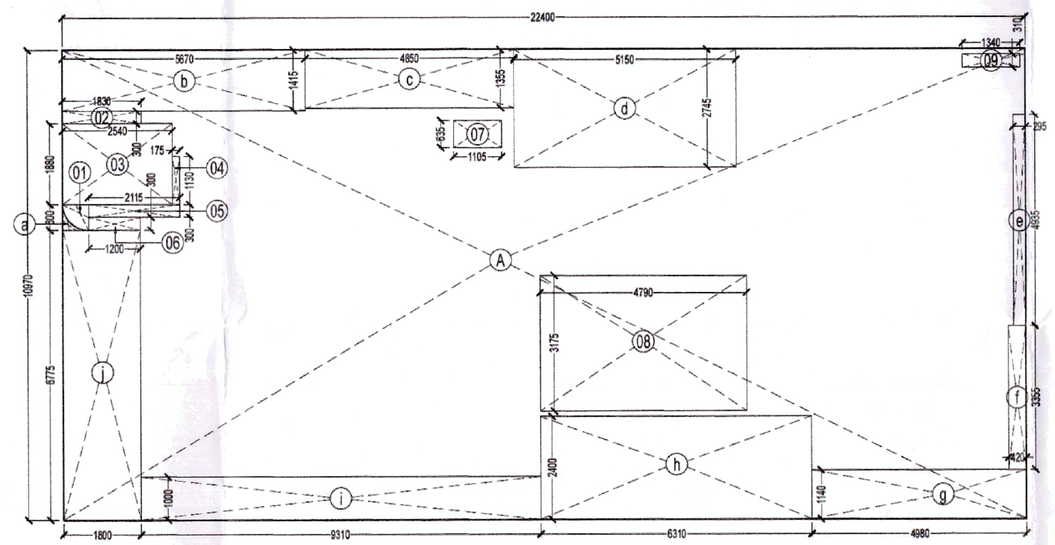

01 PENTHOUSE UPPER (TA) UNIT AREA DIAGRAM
Scale:1:100

PENTHOUSE (B) LOWER UNIT FAR DETAIL

1. ADDITION – XX								
NAME	SHAPE	LENGTH (L)	WIDTH (B)	HEIGHT (H)	FORMULA	AREA	QUANTITY	TOTAL AREA (Sq.Mts.)
A	Rectangle	23.935	10.970	-	L X B	262.567	1	262.567
							1. TOTAL ADDITION	262.567
2. DEDUCTION - YY								
a	Area of polyline					0.077	8	0.616
b	Rectangle	5.670	1.415	-	L X B	8.023	1	8.023
c	Rectangle	4.850	1.355	-	L X B	6.572	1	6.572
d	Rectangle	5.150	2.745	-	L X B	14.137	1	14.137
e	Rectangle	0.300	0.295	-	L X B	0.089	1	0.089
f	Area of polyline					0.019	1	0.019
g	Rectangle	1.235	1.290	-	L X B	1.593	1	1.593
h	Rectangle	0.600	0.600	-	L X B	0.360	3	1.080
1	Quadrant	0.600	-	-	3.14 x B X H	0.283	8	2.261
2	Rectangle	1.200	0.600	-	L X B	0.720	1	0.720
2a	Rectangle	1.230	0.600	-	L X B	0.738	1	0.738
3	Rectangle	1.830	0.300	-	L X B	0.549	1	0.549
4	Rectangle	2.540	1.880	-	L X B	4.775	1	4.775
5	Rectangle	0.175	1.130	-	L X B	0.198	1	0.198
6	Rectangle	2.115	0.300	-	L X B	0.635	1	0.635
7	Rectangle	1.200	0.300	-	L X B	0.360	1	0.360
8	Rectangle	1.200	1.200	-	L X B	1.440	1	1.440
9	Rectangle	1.105	0.635	-	L X B	0.702	1	0.702
10	Rectangle	1.465	0.595	-	L X B	0.872	1	0.872
11	Quadrant	0.300	-	-	3.14 x B X H	0.071	1	0.071
12	Rectangle	1.765	1.640	-	L X B	2.895	1	2.895
13	Rectangle	1.235	0.945	-	L X B	1.167	1	1.167
14	Rectangle	1.600	2.615	-	L X B	4.707	1	4.707
15	Rectangle	1.200	1.200	-	L X B	1.440	1	1.440
16	Rectangle	1.325	0.600	-	L X B	0.795	1	0.795
17	Rectangle	1.925	3.055	-	L X B	5.881	1	5.881
18	Rectangle	0.600	0.540	-	L X B	0.324	1	0.324
19	Rectangle	5.765	1.140	-	L X B	6.572	1	6.572
20	Rectangle	0.150	0.880	-	L X B	0.132	1	0.132
21	Rectangle	1.830	0.600	-	L X B	1.098	1	1.098
22	Rectangle	6.310	1.800	-	L X B	11.358	1	11.358
23	Rectangle	9.310	1.000	-	L X B	9.310	1	9.310
24	Rectangle	1.800	4.975	-	L X B	8.955	1	8.955
							2. TOTAL DEDUCTION	100.081
TOTAL FAR OF PENTHOUSE (B) LOWER UNIT					ADDITION (XX) - DEDUCTION (YY)			162.486 SQM.

PENTHOUSE (B) UPPER UNIT FAR DETAIL

1. ADDITION – XX								
NAME	SHAPE	LENGTH (L)	WIDTH (B)	HEIGHT (H)	FORMULA	AREA	QUANTITY	TOTAL AREA (Sq.Mts.)
A	Rectangle	22.400	10.970	-	L X B	245.728	1	245.728
							1. TOTAL ADDITION	245.728
2. DEDUCTION - YY								
a	Area of polyline					0.077	1	0.077
b	Rectangle	5.670	1.415	-	L X B	8.023	1	8.023
c	Rectangle	4.850	1.355	-	L X B	6.572	1	6.572
d	Rectangle	5.150	2.745	-	L X B	14.137	1	14.137
e	Rectangle	0.295	4.935	-	L X B	1.456	1	1.456
f	Rectangle	0.420	3.355	-	L X B	1.409	1	1.409
g	Rectangle	4.980	1.140	-	L X B	5.677	1	5.677
h	Rectangle	6.310	2.400	-	L X B	15.144	1	15.144
i	Rectangle	9.310	1.000	-	L X B	9.310	1	9.310
j	Rectangle	1.800	6.775	-	L X B	12.195	1	12.195
1	Quadrant	0.600	-	-	3.14 x B X H	0.283	1	0.283
2	Rectangle	1.830	0.300	-	L X B	0.549	1	0.549
3	Rectangle	2.540	1.880	-	L X B	4.775	1	4.775
4	Rectangle	0.175	1.130	-	L X B	0.198	1	0.198
5	Rectangle	2.115	0.300	-	L X B	0.635	1	0.635
6	Rectangle	1.200	0.300	-	L X B	0.360	1	0.360
7	Rectangle	1.105	0.635	-	L X B	0.702	1	0.702
8	Rectangle	4.790	3.175	-	L X B	15.208	1	15.208
9	Rectangle	1.340	0.310	-	L X B	0.415	1	0.415
							2. TOTAL DEDUCTION	97.124
TOTAL FAR OF PENTHOUSE (B) UPPER UNIT					ADDITION (XX) - DEDUCTION (YY)			148.604 SQM.

PENTHOUSE (B) LOWER UNIT B.U.A. DETAIL

1. ADDITION – XX								
NAME	SHAPE	LENGTH (L)	WIDTH (B)	HEIGHT (H)	FORMULA	AREA	QUANTITY	TOTAL AREA (Sq.Mts.)
A	Rectangle	23.935	10.970	-	L X B	262.567	1	262.567
							1. TOTAL ADDITION	262.567
2. DEDUCTION - YY								
a	Area of polyline					0.077	8	0.616
b	Rectangle	5.670	1.415	-	L X B	8.023	1	8.023
c	Rectangle	4.850	1.355	-	L X B	6.572	1	6.572
d	Rectangle	5.150	2.745	-	L X B	14.137	1	14.137
e	Rectangle	0.300	0.295	-	L X B	0.089	1	0.089
f	Area of polyline					0.019	1	0.019
g	Rectangle	1.235	1.290	-	L X B	1.593	1	1.593
h	Rectangle	0.600	0.600	-	L X B	0.360	3	1.080
							2. TOTAL DEDUCTION	32.128
TOTAL B.U.A. OF PENTHOUSE (B) LOWER UNIT					ADDITION (XX) - DEDUCTION (YY)			230.439 SQM.

PENTHOUSE (B) UPPER UNIT B.U.A. DETAIL

1. ADDITION – XX								
NAME	SHAPE	LENGTH (L)	WIDTH (B)	HEIGHT (H)	FORMULA	AREA	QUANTITY	TOTAL AREA (Sq.Mts.)
A	Rectangle	22.400	10.970	-	L X B	245.728	1	245.728
							1. TOTAL ADDITION	245.728
2. DEDUCTION - YY								
a	Area of polyline					0.077	1	0.077
b	Rectangle	5.670	1.415	-	L X B	8.023	1	8.023
c	Rectangle	4.850	1.355	-	L X B	6.572	1	6.572
d	Rectangle	5.150	2.745	-	L X B	14.137	1	14.137
e	Rectangle	0.295	4.935	-	L X B	1.456	1	1.456
f	Rectangle	0.420	3.355	-	L X B	1.409	1	1.409
g	Rectangle	4.980	1.140	-	L X B	5.677	1	5.677
h	Rectangle	6.310	2.440	-	L X B	15.396	1	15.396
i	Rectangle	9.280	1.000	-	L X B	9.280	1	9.280
j	Rectangle	1.830	6.775	-	L X B	12.398	1	12.398
8	Rectangle	4.790	3.110	-	L X B	14.897	1	14.897
							2. TOTAL DEDUCTION	89.322
TOTAL B.U.A. OF PENTHOUSE (B) UPPER UNIT					ADDITION (XX) - DEDUCTION (YY)			156.406 SQM.

DOOR WINDOW SCHEDULE - TOWER

Type	Opening Size	Ceiling Level	Location	Remarks
D	1200x2400	950/2400	BASEMENT LIFT LOBBY	1 HOUR FIRE RATED
D01	1200x2700	950/2700	UNIT ENTRANCE	1 HOUR FIRE RATED
D02	1000x2400	950/2400	BEDROOM	Wooden flush door
D03	900x2400	950/2400	STORE ROOM	Wooden flush door
D04	800x2400	950/2400	S. ROOM / STUDY ROOM	Wooden flush door
D05	750x2400	950/2400	TOILET	Wooden flush door
D06	750x2700	950/2700	KITCHEN, STORE ROOM	UPVC
D07	600x2400	950/2400	STORE TOILET	Wooden flush door
W01	2250x2400	3000/2700	BEDROOM	OPENABLE UPVC
W02	2400x2400	3000/2700	MASTER BEDROOM , BED ROOM	OPENABLE UPVC
V01	350x1200	1200/2400	TOILET	OPENABLE UPVC
V02	450x1200	1200/2400	STORE TOILET	OPENABLE UPVC
V03	600x1200	1200/2400	TOILET	OPENABLE UPVC
DW1	2400x2300	1150/2700	KITCHEN	OPENABLE UPVC
DW2	1800x2700	1150/2700	KITCHEN	OPENABLE UPVC
SD1	5730x2700	0/2700	LIVING/DINING	SLIDING UPVC
SD2	1600x2700	0/2700	BEDROOM	SLIDING UPVC
SD3	3430x2700	0/2700	BEDROOM	SLIDING UPVC
SD4	3100x2700	0/2700	MASTER BEDROOM	SLIDING UPVC
SD5	3750x2700	0/2700	DRAWING	SLIDING UPVC
SD6	2940x2700	0/2700	BEDROOM	SLIDING UPVC
SD7	6310x2700	0/2700	DRAWING/DINING	SLIDING UPVC
L21	1100x2700	0/2700	LOBBY	AS VENDOR
F01	1250x2400	0/2400	STAIRCASE	1 HOUR FIRE RATED
F02	1100x2700	0/2400	LIFT LOBBY	1 HOUR FIRE RATED
F03	900x2400	0/2400	ELECTRICAL ROOM	2 HOUR FIRE RATED
F04	750x2400	400/2400	LV SHAFT	2 HOUR FIRE RATED
F05	900x1600	800/2400	FHC	2 HOUR FIRE RATED
F06	2000x2400	0/2400	BASEMENT ELE SERVICE ROOMS	2 HOUR FIRE RATED
F07	1250x2400	0/2400	FIRE CONTROL ROOM	2 HOUR FIRE RATED

Note: Above mentioned opening sizes are from structural edge to edge.

PRINCIPAL ARCHITECT:

DESIGN FORUM INTERNATIONAL

K47, KAILASH COLONY, NEW DELHI - 110048
PHONE NO. 011-46556600

ARCHITECT'S SIGNATURE

OWNER'S SIGNATURE

CLIENT:
M/S AHIR INFRASPACE PRIVATE LIMITED
10th Floor, Grand View Tower,Golf Course Extension Road Sector 58 -Gurgaon-122011

JD (H) — DTP (H) — STP (H) (MEMBER) (B.P.A.C.)

PROJECT:
PROPOSED GROUP HOUSING SITE NO. 25 IN SECTOR -53 GURUGRAM - HARYANA

DRAWING TITLE:
PENTHOUSE UPPER & LOWER PLAN (TB) AND AREA DIAGRAM WITH CALCULATIONS

SCALE	NORTH	SHEET NO.
AS SHOWN		10B
DATE 24.07.2024		