SANCTIONED
VIDE MEMO No. L32.88915 DATED 5.12.2024

DTP (HQ) Member Secretary BPAC | STP (HQ) Member BPAC | CTP Chairman BPAC

Checked and found it to be in Plan (Internal) Service only subject to [illegible] in forwarding letter No. 33.38 X.6 DM 24 [illegible]

Suraj Bhan J.D.

Executive Engineer Div. Chief Engineer-III, HSVP, Panchkula

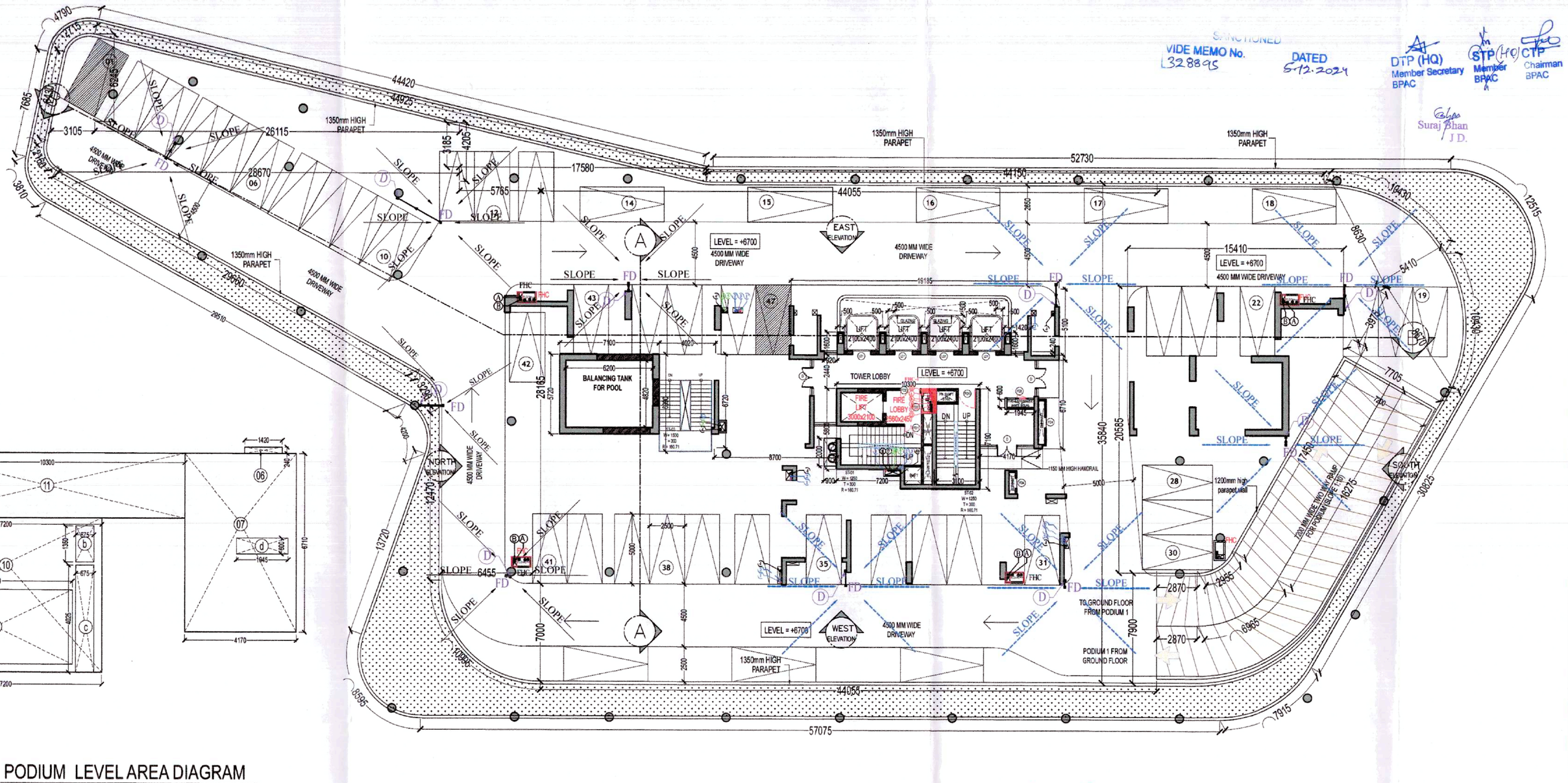

01 PODIUM LEVEL FLOOR PLAN
Scale:1:200

TOILET DETAIL (MARGIN)

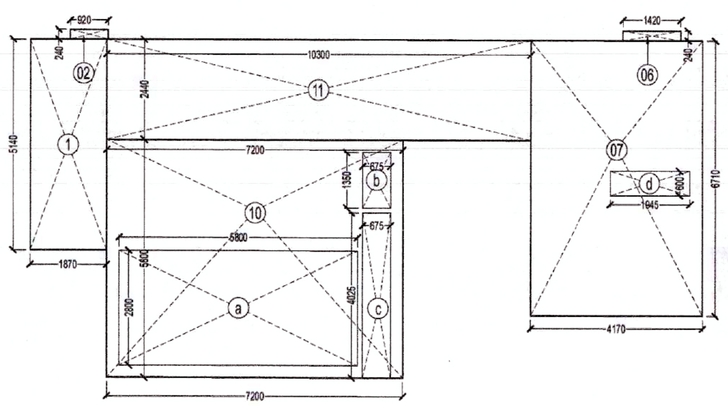

02 PODIUM LEVEL AREA DIAGRAM
Scale:1:150

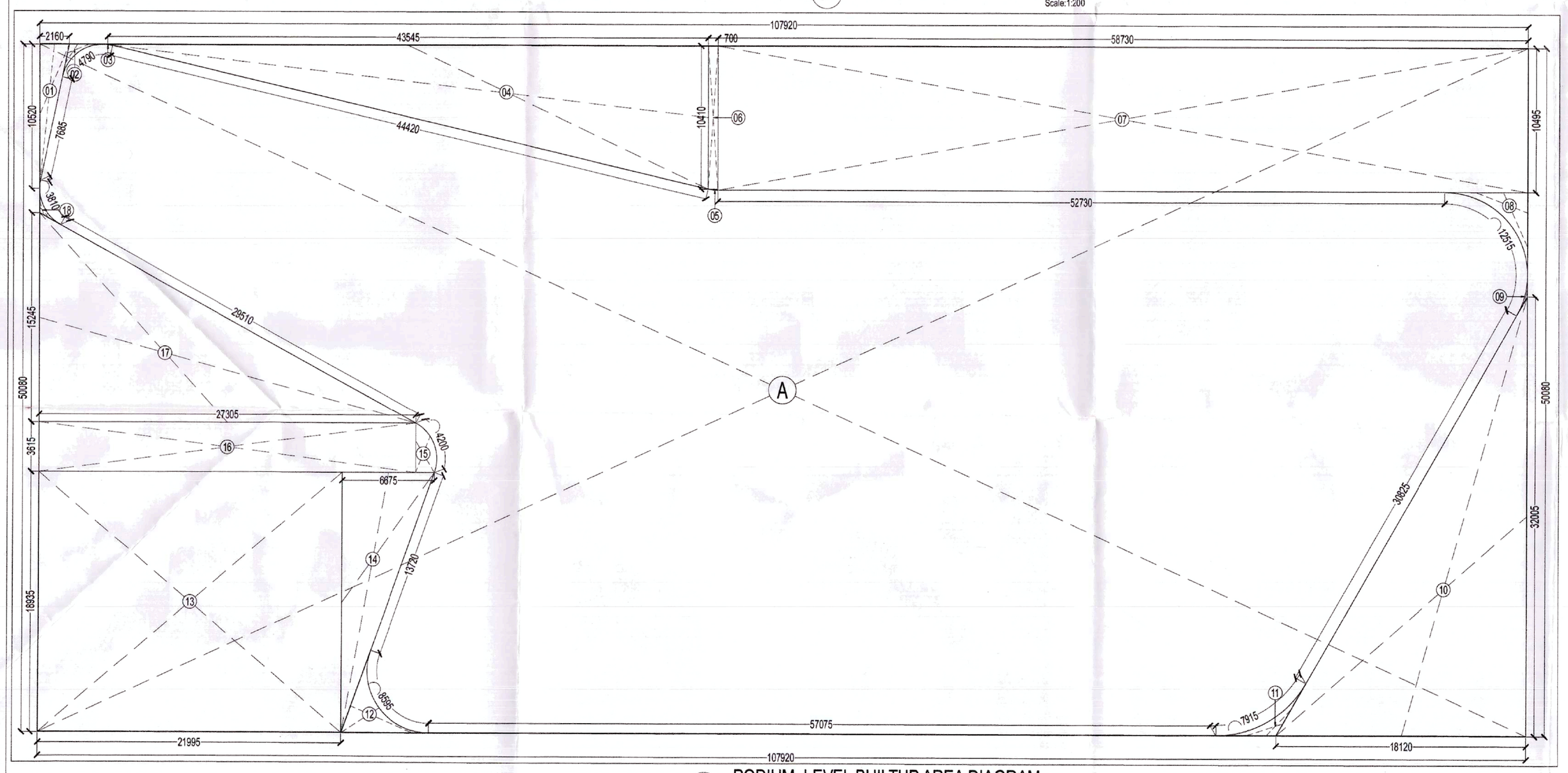

02 PODIUM LEVEL BUILTUP AREA DIAGRAM
Scale:1:200

PLUMBING LEGEND:-	
1	100Ø SOIL PIPE
2	100Ø WASTE PIPE
3	150Ø SOIL PIPE
4	150Ø WASTE PIPE
4a	100Ø WASTE PIPE FOR KITCHEN
5	75Ø VENT PIPE
6	200Ø RAIN WATER PIPE
6	150Ø RAIN WATER PIPE
6a	75Ø UTILITY BALCONY DRAIN PIPE
6b	75Ø BALCONY RAIN WATER PIPE
7	DOM. WATER SUPPLY LINE
7a	DOM. HYDRO. WATER SUPPLY PIPE TOP 4 FLOORS
8	FLU. WATER SUPPLY LINE
9	DOMESTIC WATER TANK FILLING RISER (FOR TOP TERRACE)
9	FLUSHING WATER TANK FILLING RISER (FOR TOP TERRACE)
10	DOMESTIC WATER TANK FILLING RISER (FOR SERVICE FLOOR-MID LVL)
10	FLUSHING WATER TANK FILLING RISER (FOR SERVICE FLOOR-MID LVL)
AD	ACCESS DOOR
DP	DRAIN PROVISION
FD	FLOOR DRAIN
	KHURRA 250x250 IN CORRIDOR
	KHURRA 450x450 IN TERRACE
	BUTTERFLY VALVE
	STRAINER
	DROP
	RISE
	NON RETURN VALVE

SUBMISSION DRAWINGS

GENERAL NOTES :

1. DRAWINGS IN PL & FF SERIES REPRESENTS PLUMBING AND FIRE SUPPRESSION SYSTEM.
2. IN CASE OF ANY DISCREPANCY IT SHOULD BE BROUGHT TO THE NOTICE OF ARCHITECT / PROJECT MANAGER / CONSULTANT.
3. DRAWING SHOULD NOT BE SCALED. ONLY WRITTEN DIMENSIONS TO BE FOLLOWED.
4. THIS DRAWING SHOULD BE READ IN CONJUNCTION WITH RELEVANT ARCHITECTURAL,LAND, SCAPING, STRUCTURAL AND OTHER SERVICES DRAWING.
5. ALL SERVICES SHADPS WILL BE SEALED AT EVERY FLOOR LEVEL ADPER INSTALLING SERVICES.

NOTES :

WHEREVER DEFINED RESTAURANT/FOOD COURT PLANED PLEASE PROVIDE MIN. 450MM SUNK REQUIRED.

FIRE LEGEND:–	
A.	100Ø HYDRANT PIPE FOR LOWER ZONE
A1.	100Ø HYDRANT PIPE FOR UPPER ZONE
B.	80Ø DRAIN PIPE
C.	150Ø SPRINKLER PIPE FOR LOWER ZONE
C1.	150Ø SPRINKLER PIPE FOR UPPER ZONE
D.	100Ø FIRE HYDRANT MAKE UP PIPE
FHC	FIRE HOSE CABINET
FLD	FLOOR DRAIN

PARKING SUMMARY			
REQUIRED PARKING FOR ALL APARTMENTS			
TOTAL NO. OF DWELLING UNITS	=	100	
PARKING REQUIRED @ 1.5 ECS PER DU	=	150	ECS
STILTS PARKING AREA (GROUND & PODIUM 1 LEVEL)			
Area per ECS Required		28	SQ.M.
Proposed Parking Area @ Stilt/Ground	=	1268.396	SQ.M.
Proposed Parking Area @ Podium		2323.796	SQ.M.
Total Proposed Parking Area in Stilt & Podium		3592.192	SQ.M.
Total Proposed ECS in Stilt & Podium	=	45.300	ECS
	Say	45	ECS
BASEMENT PARKING AREA			
Area per ECS Required		32	SQ.M.
Proposed Parking Area @ Basement 1	=	2714.092	SQ.M.
Proposed Parking Area @ Basement 2	=	2847.585	SQ.M.
Proposed Parking Area @ Basement 3	=	3145.430	SQ.M.
Total Proposed Parking Area in Basements		8707.108	SQ.M.
Total Proposed ECS in Basements	=	272.097	ECS
	Say	272	ECS
TOTAL ECS PROPOSED (STILTS & BASEMENT)	=	317	ECS
INDEPENDENT PARKING PROVIDED IN NUMBERS			
Basement 1	=	54	NO.'S
Basement 2	=	70	NO.'S
Basement 3	=	88	NO.'S
Stilt/Ground	=	10	NO.'S
Podium 1	=	47	NO.'S
TOTAL	=	269	NO.'S

DOOR WINDOW SCHEDULE - TOWER

Type	Opening Size	Cill Level	Location	Remarks
D	1500x2400	300/450	BASEMENT LIFT LOBBY	1 HOUR FIRE RATED
D01	1200x2700	300/750	UNIT ENTRANCE	1 HOUR FIRE RATED
D02	1000x2400	300/450	BEDROOM	Wooden flush door
D03	800x2400	300/450	STORE ROOM	Wooden flush door
D04	900x2400	300/450	S. ROOM / STUDY ROOM	Wooden flush door
D05	750x2400	300/450	TOILET	Wooden flush door
D06	750x2100	300/750	KITCHEN, STORE ROOM	UPVC
D07	600x2400	300/450	STORE TOILET	Wooden flush door
W08	2250x2400	300/750	BEDROOM	OPENABLE UPVC
W09	3400x2400	300/750	MASTER BEDROOM, BED ROOM	OPENABLE UPVC
V01	350x1200	1200/2400	TOILET	OPENABLE UPVC
V02	450x1200	1200/2400	STORE TOILET	OPENABLE UPVC
V03	600x1200	1200/2400	TOILET	OPENABLE UPVC
DW1	2400x2700	1150/2700	KITCHEN	OPENABLE UPVC
DW2	1800x2700	1150/2700	KITCHEN	OPENABLE UPVC
SD1	5730x2700	300/750	LIVING/DINING	SLIDING UPVC
SD2	1800x2700	300/750	BEDROOM	SLIDING UPVC
SD3	2400x2700	300/750	BEDROOM	SLIDING UPVC
SD4	5120x2700	300/750	MASTER BEDROOM	SLIDING UPVC
SD5	3780x2700	300/750	DRAWING	SLIDING UPVC
SD6	2900x2700	300/750	BEDROOM	SLIDING UPVC
SD7	6140x2700	300/750	DRAWING/DINING	SLIDING UPVC
LD1	1500x2700	300/750	LOBBY	AS VENDOR
FD1	1250x2400	300/450	STAIRCASE	1 HOUR FIRE RATED
FD2	1500x2700	300/450	LIFT LOBBY	1 HOUR FIRE RATED
FD3	900x2400	300/450	ELECTRICAL ROOM	2 HOUR FIRE RATED
FD4	750x2000	450/2400	LV SHAFT	2 HOUR FIRE RATED
FD5	900x1800	6500/2400	FHC	2 HOUR FIRE RATED
FD6	2000x2400	300/450	BASEMENT ELE. SERVICE ROOMS	2 HOUR FIRE RATED
FD7	1250x2400	300/450	FIRE CONTROL ROOM	2 HOUR FIRE RATED

Note: Above mentioned opening sizes are from structure wall to wall.

PODIUM LEVEL BUA CALCULATION								
1. ADDITION – XX								
NAME	**SHAPE**	**LENGTH (L)**	**WIDTH (B)**	**HEIGHT (H)**	**FORMULA**	**AREA**	**QUANTITY**	**TOTAL AREA (Sq.Mts.)**
A	Rectangle	107.920	50.080	-	L X B	5404.634	1	5404.634
							1. TOTAL ADDITION	**5404.634**
2. DEDUCTION - YY								
1	Triangle	-	2.160	10.520	1/2 X L X B	11.362	1	11.362
2	Area of polyline					1.164	1	1.164
3	Area of polyline					0.004	1	0.004
4	Triangle	-	10.410	43.545	1/2 X L X B	226.652	1	226.652
5	Area of polyline					0.038	1	0.038
6	Rectangle	10.410	0.700	-	L X B	7.287	1	7.287
7	Rectangle	58.730	10.495	-	L X B	616.371	1	616.371
8	Area of polyline					7.725	1	7.725
9	Area of polyline					0.210	1	0.210
10	Triangle	-	18.120	32.005	1/2 X L X B	289.965	1	289.965
11	Area of polyline					3.103	1	3.103
12	Area of polyline					9.273	1	9.273
13	Rectangle	21.995	18.935	-	L X B	416.475	1	416.475
14	Triangle	-	6.675	18.935	1/2 X L X B	63.196	1	63.196
15	Area of polyline					4.339	1	4.339
16	Rectangle	27.305	3.615	-	L X B	98.708	1	98.708
17	Triangle	-	15.245	27.305	1/2 X L X B	208.132	1	208.132
18	Area of polyline					0.505	1	0.505
							2. TOTAL DEDUCTION	**1964.509**
PODIUM BUA					**ADDITION (XX) - DEDUCTION (YY)**			**3440.125 SQM.**

PODIUM LEVEL FAR CALCULATION								
1. ADDITION – XX								
NAME	**SHAPE**	**LENGTH (L)**	**WIDTH (B)**	**HEIGHT (H)**	**FORMULA**	**AREA**	**QUANTITY**	**TOTAL AREA (Sq.Mts.)**
1	Rectangle	1.870	5.140	-	L X B	9.612	1	9.612
2	Rectangle	0.920	0.240	-	L X B	0.221	1	0.221
6	Rectangle	1.420	0.240	-	L X B	0.341	1	0.341
7	Rectangle	6.710	4.170	-	L X B	27.981	1	27.981
11	Rectangle	10.300	2.440	-	L X B	25.132	1	25.132
							1. TOTAL ADDITION	**63.286**
2. DEDUCTION - YY								
a	Rectangle	5.800	2.800	-	L X B	16.240	1	16.240
b	Rectangle	0.675	1.350	-	L X B	0.911	1	0.911
c	Rectangle	0.675	4.025	-	L X B	2.717	1	2.717
d	Rectangle	1.970	0.600	-	L X B	1.182	1	1.182
							2. TOTAL DEDUCTION	**21.050**
TOTAL F.A.R. ON PODIUM LEVEL					**ADDITION (XX) - DEDUCTION (YY)**			**42.236 SQM.**

PRINCIPAL ARCHITECT:

DESIGN FORUM INTERNATIONAL

K47, KAILASH COLONY, NEW DELHI - 110048
PHONE NO. 011-46556600

ARCHITECT'S SIGNATURE

A. VIKKEY Off. No. 3 ARD Tower Sec-54, Gurugram CA-2017-50235

OWNER'S SIGNATURE

AHIR INFRASPACE PVT. LTD. AIRL HARYANA

CLIENT:

M/S AHIR INFRASPACE PRIVATE LIMITED
10th Floor, Grand View Tower,Golf Course Extension Road
Sector 58 ~Gurgaon~ 122011

PROJECT: JD (H) DTP (H) STP (H) (STILTS PLUS) (B.P.A.C.)

PROPOSED GROUP HOUSING SITE NO. 25 IN SECTOR -53 GURUGRAM - HARYANA

DRAWING TITLE:

PODIUM LEVEL PLAN, AREA DIAGRAM & CALCULATIONS

SCALE	NORTH	SHEET NO.
AS SHOWN		06
DATE 24.07.2024		