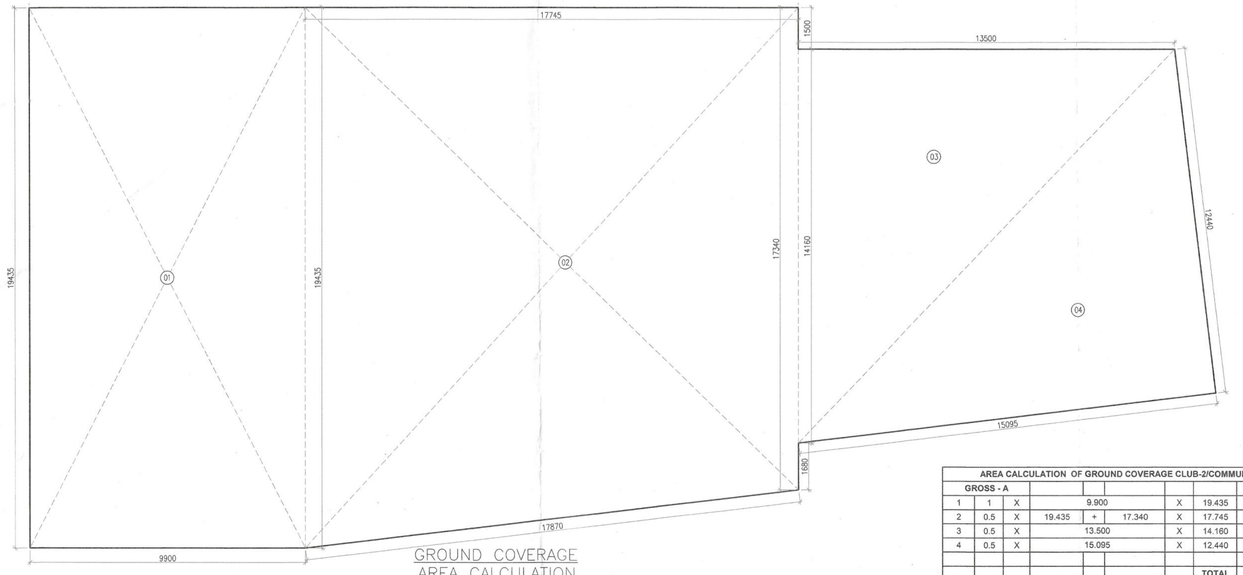

GROUND COVERAGE
AREA CALCULATION

AREA CALCULATION OF GROUND COVERAGE CLUB-2/COMMUNITY BUILDING											
GROSS - A											
1	1	X			9.900		X	19.435	=	192.407	SQM
2	0.5	X	19.435	=	17.340		X	17.745	=	309.286	SQM
3	0.5	X			13.500		X	14.160	=	95.580	SQM
4	0.5	X			15.095		X	12.440	=	93.891	SQM
								TOTAL	=	708.164	SQM
TOTAL GROUND COVREAGE (CLUB-2/COMMUNITY BUILDING)			=	GROSS - A							
			=	708.164	SQM						

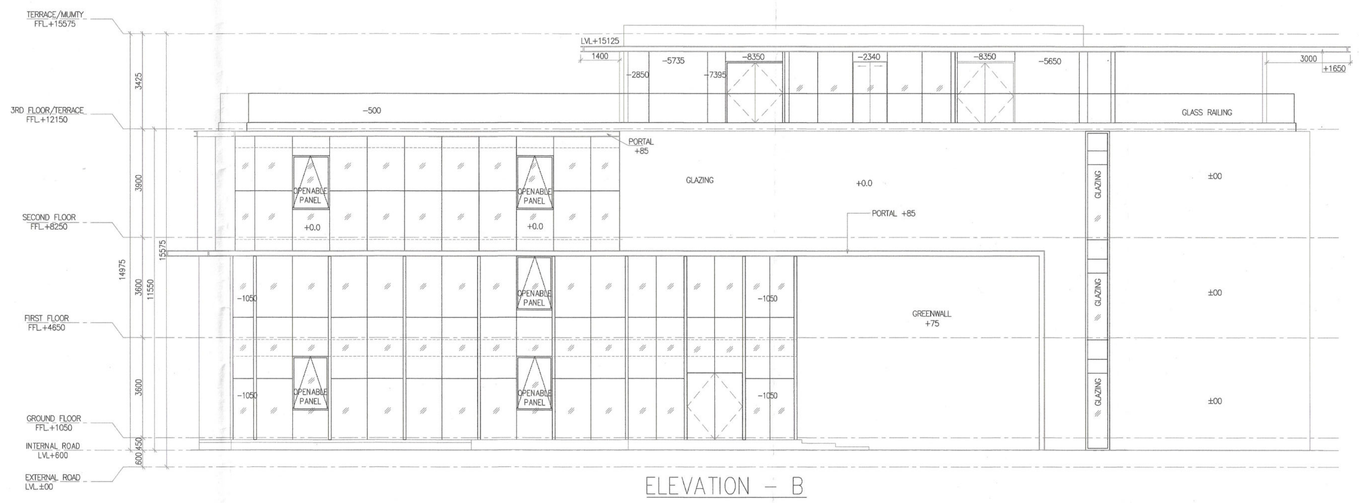

ELEVATION – B

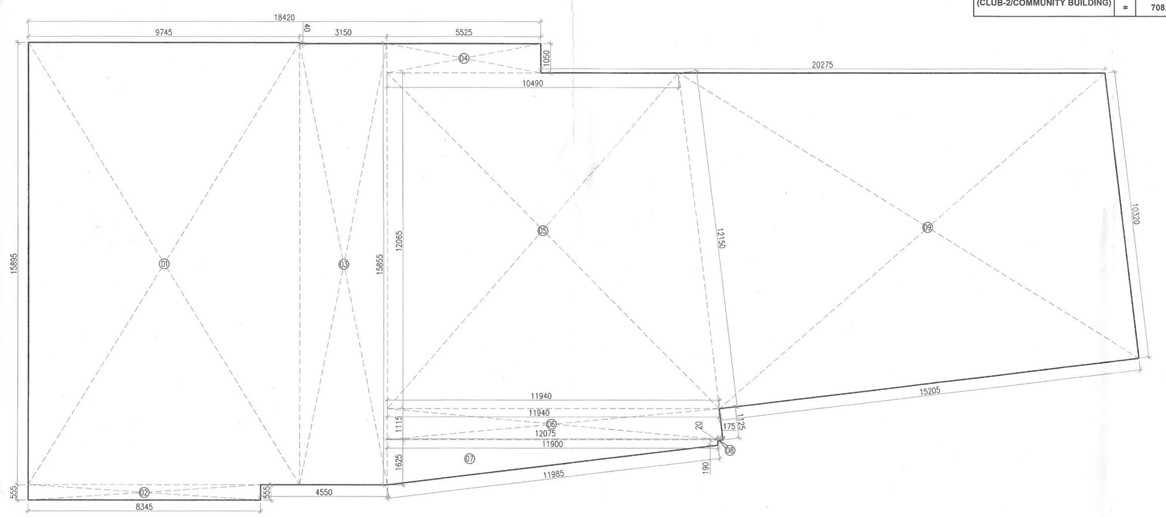

GROUND FLOOR
AREA CALCULATION

AREA CALCULATION OF GROUND FLOOR CLUB-2/COMMUNITY BUILDING										
GROSS - A										
1		X		9.745		X	15.895	=	154.897	SQM
2	1	X		0.555		X	0.555	=	4.631	SQM
3	1	X		3.150		X	15.855	=	49.943	SQM
4	1	X		5.525		X	1.050	=	5.801	SQM
5	0.5	X	10.490	+	11.940	X	12.095	=	135.309	SQM
6	0.5	X	11.940	+	12.075	X	1.115	=	13.368	SQM
7	0.5	X	1.625	+	0.190	X	11.900	=	10.799	SQM
8	0.5	X		0.175		X	0.320	=	0.028	SQM
9	0.5	X	12.150	+	10.320	X	15.205	=	170.828	SQM
							TOTAL	=	545.599	SQM
TOTAL FAR AREA OF GROUND FLOOR (CLUB-2/COMMUNITY BUILDING)			=	GROSS - A						
			=	545.599	SQM					

TOTAL NON FAR AREA OF GROUND FLOOR (CLUB-2/COMMUNITY BUILDING)	=	(GROUND COVERAGE	-	FAR AREA	=	NON FAR AREA	
	=	708.164	-	545.599	=	162.565	SQM

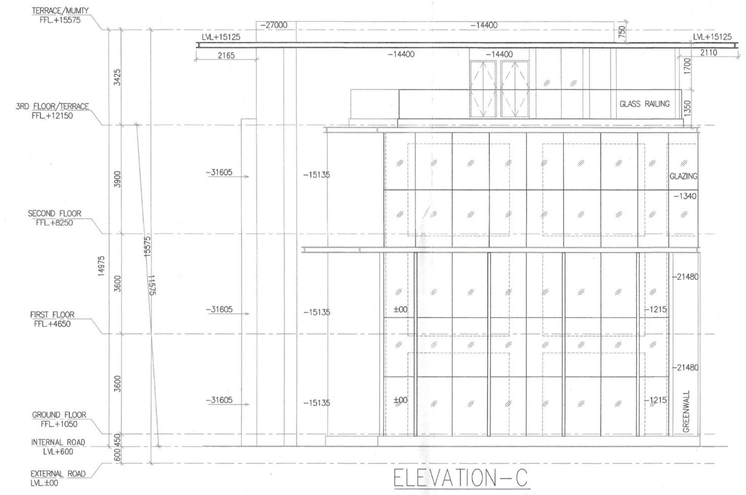

ELEVATION–C

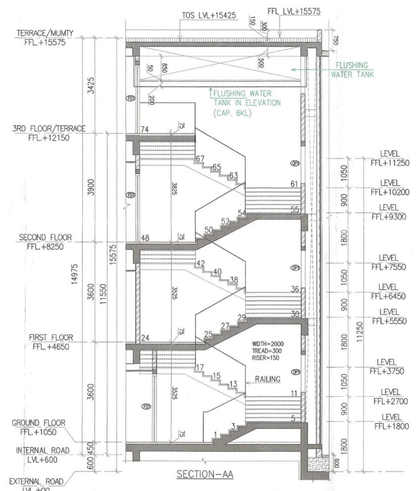

SECTION–AA

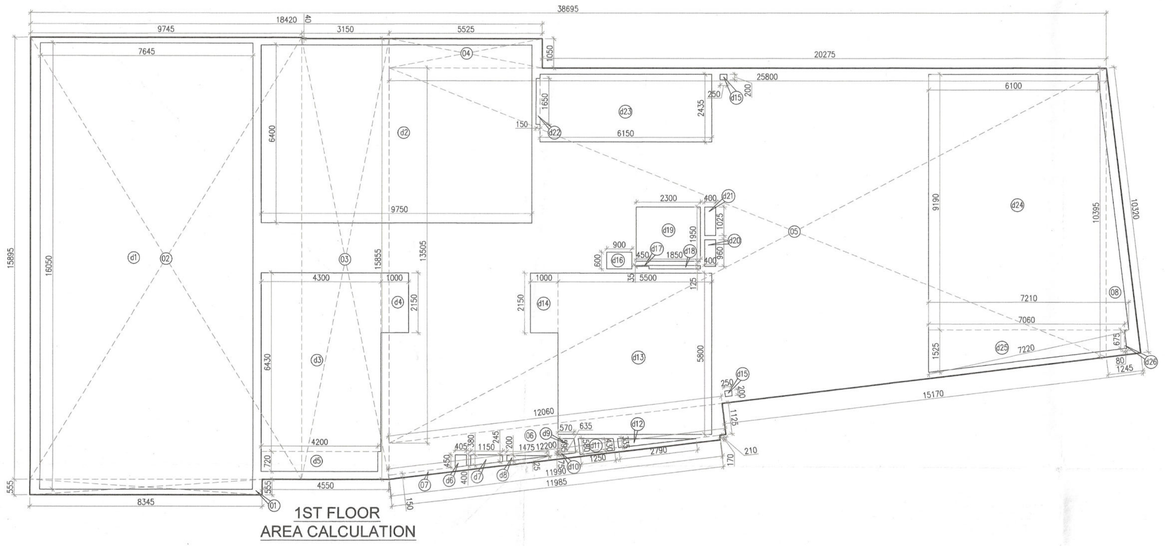

1ST FLOOR
AREA CALCULATION

AREA CALCULATION OF 1ST FLOOR CLUB-2/COMMUNITY BUILDING										
GROSS - A										
1	1	X		8.345		X	0.555	=	4.631	SQM
2	1	X		9.745		X	15.895	=	154.897	SQM
3	1	X		3.150		X	15.855	=	49.943	SQM
4	1	X		5.525		X	1.050	=	5.801	SQM
5	0.5	X	13.505	+	10.395	X	25.800	=	308.310	SQM
6	0.5	X	12.060	+	12.200	X	1.125	=	13.648	SQM
7	0.5	X	11.990	+	11.985	X	0.150	=	1.798	SQM
8	0.5	X		1.245		X	10.320	=	6.424	SQM
							TOTAL	=	545.451	SQM
GROSS - B										
d1	1	X		7.645		X	16.050	=	122.702	SQM
d2	1	X		9.750		X	6.400	=	62.400	SQM
d3	1	X		4.300		X	6.430	=	27.649	SQM
d4	1	X		1.000		X	2.150	=	2.150	SQM
d5	1	X		4.200		X	0.720	=	3.024	SQM
d6	0.5	X	0.450	+	0.400	X	0.405	=	0.172	SQM
d7	0.5	X	0.380	+	0.245	X	1.150	=	0.359	SQM
d8	0.5	X	0.200	+	0.025	X	1.475	=	0.166	SQM
d9	0.5	X	0.635	+	0.570	X	0.595	=	0.358	SQM
d10	0.5	X		0.635		X	0.075	=	0.024	SQM
d11	0.5	X	0.580	+	0.430	X	1.250	=	0.631	SQM
d12	0.5	X		2.790		X	0.335	=	0.467	SQM
d13	1	X		5.500		X	0.800	=	4.400	SQM
d14	1	X		0.650		X	1.400	=	0.910	SQM
d15	1	X		0.400		X	0.965	=	0.386	SQM
d16	1	X		0.400		X	1.025	=	0.410	SQM
d17	1	X		0.600		X	0.900	=	0.540	SQM
d18	1	X		0.400		X	0.960	=	0.384	SQM
d19	2	X		0.250		X	0.100	=	0.050	SQM
							TOTAL	=	198.453	SQM
TOTAL FAR AREA OF 2ND FLOOR CLUB-2(COMMERCIAL)						=	GROSS-A	-	GROSS-B	
						=	567.868	-	198.453	
TOTAL						=	369.415			SQM
2ND FLOOR BUILT UP AREA CLUB-2(COMMERCIAL)										
GROSS-D										
d2	1	X		4.300		X	7.150	=	30.745	SQM
d3	1	X		1.000		X	2.150	=	2.150	SQM
d10	1	X		5.500		X	5.800	=	31.900	SQM
d11	1	X		0.650		X	1.400	=	0.910	SQM
d12	1	X		2.150		X	0.850	=	1.828	SQM
							TOTAL	=	67.533	SQM
TOTAL BUILT UP AREA OF 2ND FLOOR CLUB-2(COMMERCIAL)						=	GROSS-C	+	GROSS-D	
						=	369.415	+	67.533	
						=	436.948			SQM
TOTAL NON FAR AREA OF 2ND FLOOR CLUB-2(COMMERCIAL)	=	BULIT UP AREA	-	FAR AREA	=	NON FAR AREA				
	=	436.948	-	369.415	=	67.533	SQM			

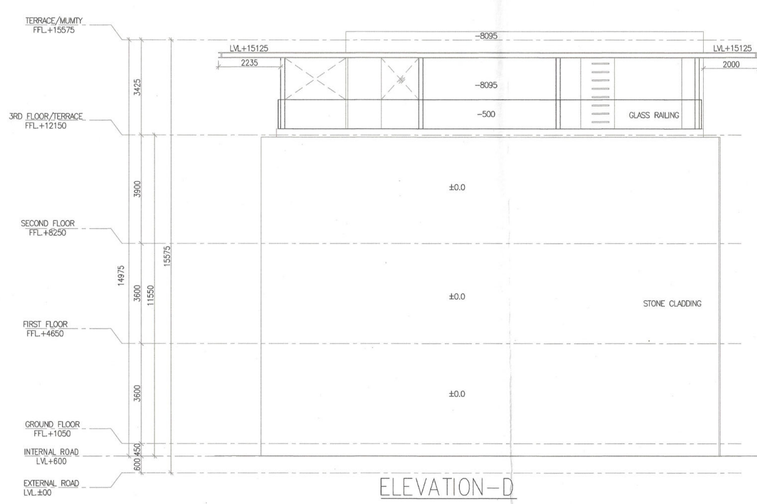

ELEVATION–D

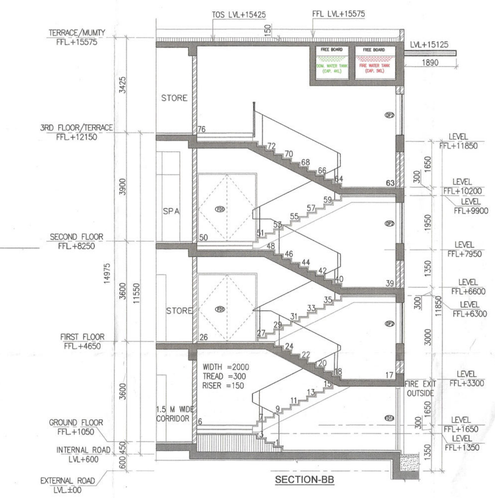

SECTION–BB

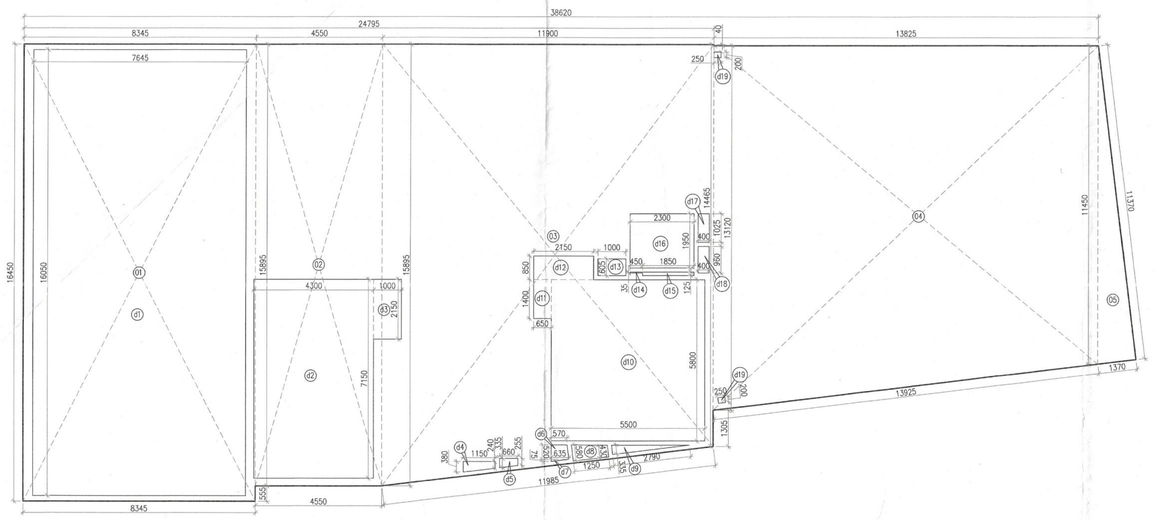

2ND FLOOR
AREA CALCULATION
CLUB-2(COMMERCIAL)

AREA CALCULATION OF 2ND FLOOR CLUB-2(COMMERCIAL)										
GROSS - A										
1	1	X		8.345		X	16.450	=	137.275	SQM
2	1	X		4.550		X	15.895	=	72.322	SQM
3	0.5	X	15.895	+	14.465	X	11.900	=	180.642	SQM
4	0.5	X	13.120	+	11.450	X	13.825	=	169.840	SQM
5	0.5	X		1.370		X	11.370	=	7.788	SQM
							TOTAL	=	567.868	SQM
GROSS - B										
d1	1	X		7.645		X	16.050	=	122.702	SQM
d2	1	X		4.300		X	7.150	=	30.745	SQM
d3	1	X		1.000		X	2.150	=	2.150	SQM
d4	0.5	X	0.380	+	0.240	X	1.150	=	0.357	SQM
d5	0.5	X	0.335	+	0.255	X	0.660	=	0.195	SQM
d6	0.5	X	0.635	+	0.570	X	0.520	=	0.315	SQM
d7	0.5	X		0.635		X	0.075	=	0.024	SQM
d8	0.5	X	0.580	+	0.430	X	1.250	=	0.631	SQM
d9	0.5	X		2.790		X	0.335	=	0.467	SQM
d10	1	X		5.500		X	5.800	=	31.900	SQM
d11	1	X		0.650		X	1.400	=	0.910	SQM
d12	1	X		2.150		X	0.850	=	1.828	SQM
d13	1	X		1.000		X	0.605	=	0.605	SQM
d14	1	X		0.450		X	0.035	=	0.016	SQM
d15	1	X		1.850		X	0.125	=	0.231	SQM
d16	1	X		2.300		X	1.950	=	4.485	SQM
d17	1	X		0.400		X	1.025	=	0.410	SQM
d18	1	X		0.400		X	0.960	=	0.384	SQM
d19	2	X		0.250		X	0.200	=	0.100	SQM
							TOTAL	=	198.453	SQM
TOTAL FAR AREA OF 2ND FLOOR CLUB-2(COMMERCIAL)						=	GROSS-A	-	GROSS-B	
						=	567.868	-	198.453	
TOTAL						=	369.415			SQM
2ND FLOOR BUILT UP AREA CLUB-2(COMMERCIAL)										
GROSS-D										
d2	1	X		4.300		X	7.150	=	30.745	SQM
d3	1	X		1.000		X	2.150	=	2.150	SQM
d10	1	X		5.500		X	5.800	=	31.900	SQM
d11	1	X		0.650		X	1.400	=	0.910	SQM
d12	1	X		2.150		X	0.850	=	1.828	SQM
							TOTAL	=	67.533	SQM
TOTAL BUILT UP AREA OF 2ND FLOOR CLUB-2(COMMERCIAL)						=	GROSS-C	+	GROSS-D	
						=	369.415	+	67.533	
						=	436.948			SQM
TOTAL NON FAR AREA OF 2ND FLOOR CLUB-2(COMMERCIAL)	=	BULIT UP AREA	-	FAR AREA	=	NON FAR AREA				
	=	436.948	-	369.415	=	67.533	SQM			

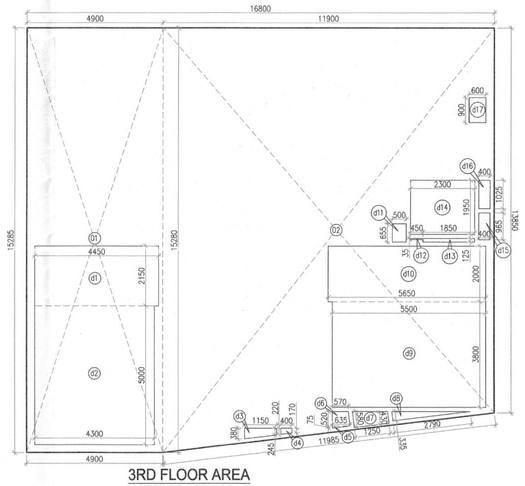

3RD FLOOR AREA
CALCULATION
CLUB-2(COMMERCIAL)

AREA CALCULATION OF 3RD FLOOR CLUB-2(COMMERCIAL)										
GROSS - A										
1	1	X		4.900		X	15.285	=	74.897	SQM
2	0.5	X	16.280	+	13.850	X	11.900	=	173.324	SQM
							TOTAL	=	248.220	SQM
GROSS - B										
d1	1	X		4.450		X	2.150	=	9.568	SQM
d2	1	X		4.300		X	5.000	=	21.500	SQM
d3	0.5	X	0.380	+	0.245	X	1.150	=	0.359	SQM
d4	0.5	X	0.220	+	0.170	X	0.400	=	0.078	SQM
d5	0.5	X		0.635		X	0.075	=	0.024	SQM
d6	0.5	X	0.635	+	0.570	X	0.520	=	0.313	SQM
d7	0.5	X	0.580	+	0.430	X	1.250	=	0.631	SQM
d8	0.5	X		2.790		X	0.335	=	0.467	SQM
d9	1	X		5.500		X	3.800	=	20.900	SQM
d10	1	X		5.650		X	2.000	=	11.300	SQM
d11	1	X		0.500		X	0.655	=	0.328	SQM
d12	1	X		0.450		X	0.035	=	0.016	SQM
d13	1	X		1.850		X	0.125	=	0.231	SQM
d14	1	X		2.300		X	1.950	=	4.485	SQM
d15	1	X		0.400		X	0.965	=	0.386	SQM
d16	1	X		0.400		X	1.025	=	0.410	SQM
d17	1	X		0.600		X	0.900	=	0.540	SQM
							TOTAL	=	71.536	SQM
TOTAL FAR AREA OF 3RD FLOOR CLUB-2(COMMERCIAL)						=	GROSS-A	-	GROSS-B	
						=	248.220	-	71.536	
						=	176.684			SQM
3RD FLOOR BUILT UP AREA CLUB-2(COMMERCIAL)										
GROSS-D										
d1	1	X		4.450		X	2.150	=	9.568	SQM
d2	1	X		4.300		X	5.000	=	21.500	SQM
d9	1	X		5.500		X	3.800	=	20.900	SQM
d10	1	X		5.650		X	2.000	=	11.300	SQM
							TOTAL	=	63.268	SQM
TOTAL BUILT UP AREA OF FLOOR CLUB-2(COMMERCIAL)						=	GROSS-C	+	GROSS-D	
						=	176.684	+	63.268	
						=	239.951	SQM		
TOTAL NON FAR AREA OF 3RD FLOOR CLUB-2(COMMERCIAL)	=	BULIT UP AREA	-	FAR AREA	=	NON FAR AREA				
	=	239.951	-	176.684	=	63.268	SQM			

Note :-

1. BUILDING WILL BE DESIGNED (STRUCTURES) AS PER RELEVENT IS CODES FOR EARTH QUAKE RESISTANCE.
2. BUILDING HAS AUTOMATIC SPRINKLER SYSTEM ON ALL FLOORS.

LEGEND: –

PROJECT:-

REVISED (1st Revision) GROUP HOUSING ON SITE MEASURING 9.53 ACRES IN RESIDENTIAL PLOTTED COLONY MEASURING 177.86 ACRES(LICENSE NO. 10 OF 2009 DATED DT.21.05.2009,LICENSE NO. 113 OF 2011 DATED 22.12.2011 & LICENSE NO. 117 OF 2022 DATED 23.08.2022) IN SECTOR 65 & 62,GURUGRAM BEING DEVELOPED BY ACTIVE PROMOTERS AND OTHERS IN COLLABORATION WITH EMAAR INDIA LTD(FORMERLY KNOWN AS EMAAR MGF LAND LTD)

ARCHITECT:

DSP DESIGN ASSOCIATES PVT. LTD.
Architects & Interior Designers

8th Floor, Devchand House, Shiv Sagar Estate, Dr Annie Besant Road, Opposite Nehru Centre, Worli, Mumbai - 400 018. Tel: +91 22 4915 1800 Web: www.dspdesign.co.in

#1002A, Tenth Floor, Times Tower, M.G. Road, Gurgaon 122002. Tel: +91 124 4221417

• MUMBAI • BENGALURU • PUNE • NEW DELHI • HYDERABAD

Associate Architects

RSMS ARCHITECTS

RSMS ARCHITECTS PVT. LTD.
69,Nora Niwas Bhawani Kunj
(Behind D2), Vasant Kunj,
New Delhi–110070.
Tel.: 011–26898616,26898617
www.rsms–arch.com

DD(IT)
MEMBER
BPAC

This is a "PROVISIONAL BUILDING PLAN" approved only for the purpose of inviting Objections from the general public

S.T.P. (HQ) Member Secretary B.P.A.C. | S.T.P. (HQ) Member B.P.A.C. | C.T.P. (HL) Chairman B.P.A.C.

DTP (HQ) | ATP(HQ)

JD. | (Dinesh Kumar) PA(HQ)

ARCHITECT'S SEAL & SIGNATURE	OWNER'S SEAL & SIGNATURE
Manmeet Singh Bali Architect (B.Arch, MCA) CA/2003/30546	

APRIL.–2024.	Scale : 1:100	(1st Revision)
Drawing Title:– FAR AREA CALCULATION OF GROUND TO 3RD FLOOR ,& MUMTY AREA ELEVATIONS-B,C,D & SECTION-A & B CLUB-2/COMMUNITY BUILDING		Drawing No:– CB2-02 27052024