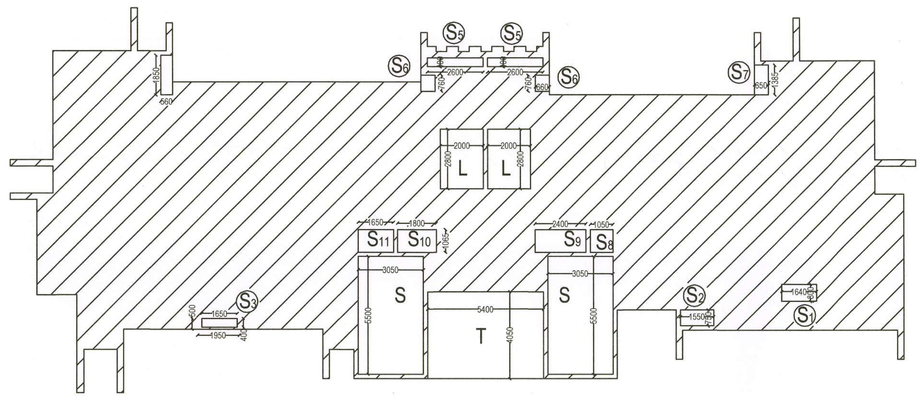

DEDCUTION SHAFTS/ LIFT / STAIR WELL TWENTY SIXTH FLOOR 425.108 SQM.

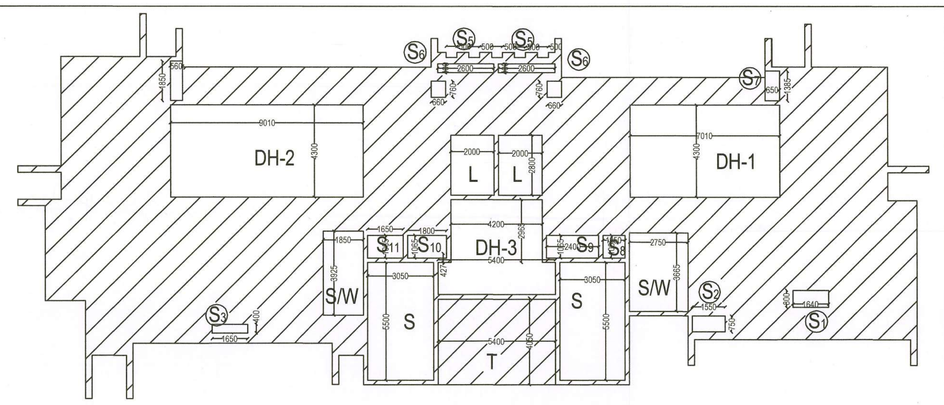

DEDCUTION SHAFTS/ LIFT / STAIR WELL /DOUBLE HEIGHT/ DUPLEX 345.079 SQM.

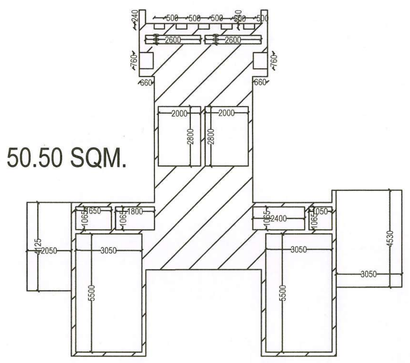

50.50 SQM.

DEDCUTION SHAFTS/ LIFT / STAIR WELL

Detail of Block C1-B2

Ground Floor

Block	Nos	Length	x	Breadth	Area
A-1	1	0.30	X	2.000	0.60
A-2	1	0.30	X	1.315	0.39
A-3	1	5.60	X	1.450	8.12
A-4	1	2.00	X	0.300	0.60
A-5	1	1.25	X	0.300	0.38
A-6	1	0.75	X	4.750	3.56
A-7	1	2.20	X	1.450	3.19
	2	0.30	X	2.015	1.21
A-8	1	1.95	X	0.500	0.98
A-9	1	23.20	X	11.050	256.36
A-10	1	6.000	X	1.660	9.96
	2	0.300	X	0.640	0.38
Less	5	0.500	X	0.240	-0.60
A-11	1	1.450	X	1.450	2.10
	1	0.300	X	1.350	0.41
A-12	1	12.300	X	2.800	34.44
A-13	1	5.150	X	10.450	32.92
A-14	1	4.700	X	10.050	47.24
A-15	1	1.950	X	0.950	1.85
	1	0.300	X	1.350	0.41
A-16	1	0.300	X	1.315	0.39
	1	0.300	X	2.000	0.60
A-17	1	5.650	X	1.585	8.96
A-18	1	7.350	X	9.450	69.46
	1	2.040	X	0.400	-0.82
	1	1.900	X	0.300	-0.57
A-19	1	1.350	X	4.790	6.47
A-20	1	0.300	X	2.900	0.87
		Total Area			489.845

Block	Nos	Length	x	Breadth	Area
Less Shafts					
S-1	1	1.640	X	0.800	1.312
S-2	1	1.550	X	0.750	1.163
S-3	1	1.650	X	0.400	0.660
S-4	1	0.560	X	1.850	1.036
S-5	2	2.600	X	0.400	2.080
S-6	2	0.660	X	0.760	1.003
S-7	1	0.650	X	1.385	0.900
S-8	1	1.050	X	1.065	1.118
S-9	1	2.400	X	1.065	2.556
S-10	1	1.800	X	1.065	1.917
S-11	1	1.650	X	1.065	1.757
		Total Area For Deduction			15.502
		Total Area			474.343
Less Stair Case & Lift wells					
L	2	2.00	X	2.80	-11.200
S	2	3.05	X	5.50	-33.550
T	1	5.40	X	4.05	-21.870
Net Proposed area at First Floor					407.723
First Floor to Twenty fourth Floor					
		24	x	407.72	9785.35

Detail of Block C1-B2

Twenty Fifth Floor area

Block	Nos	Length	x	Breadth	Area
A-1	1	0.30	X	2.000	0.60
A-2	1	0.30	X	1.315	0.39
A-3	1	5.60	X	1.450	8.12
A-4	1	2.00	X	0.300	0.60
A-5	1	1.25	X	0.300	0.38
A-6	1	0.75	X	4.750	3.56
A-7	1	2.20	X	0.950	2.09
	2	0.30	X	2.015	1.21
A-8	1	12.95	X	1.600	20.72
A-9	1	14.05	X	9.950	139.80
A-10	1	6.000	X	1.420	8.52
	2	0.300	X	0.640	0.38
	5	0.500	X	0.240	0.60
A-11	1	1.450	X	0.950	1.38
	1	0.300	X	1.350	0.41
A-12	1	12.300	X	13.265	163.16
A-13	1	9.150	X	6.600	5.49
A-14	1	2.750	X	10.050	27.64
A-15	2	0.300	X	1.350	0.81
	1	0.300	X	1.315	0.39
	1	0.300	X	2.000	0.60
A-16	1	0.300	X	1.315	0.39
	1	0.300	X	2.000	0.60
A-17	1	5.650	X	1.585	8.96
A-18	1	9.300	X	11.000	102.30
	1	1.350	X	6.340	8.56
A-20	1	1.900	X	0.300	0.57
		Total Area			507.231

Block	Nos	Length	x	Breadth	Area
Less Shafts					
S-1	1	1.640	X	0.800	1.312
S-2	1	1.550	X	0.750	1.163
S-3	1	1.650	X	0.400	0.660
S-4	1	0.560	X	1.850	1.036
S-5	2	2.600	X	0.400	2.080
S-6	2	0.660	X	0.760	1.003
S-7	1	0.650	X	1.385	0.900
S-8	1	1.050	X	1.065	1.118
S-9	1	2.400	X	1.065	2.556
S-10	1	1.800	X	1.065	1.917
S-11	1	1.650	X	1.065	1.757
		Total Area For Deduction			15.502
		Total Area			491.798
Less Stair Case & Lift wells					
L	2	2.00	X	2.80	-11.200
S	2	3.05	X	5.50	-33.550
T	1	5.40	X	4.05	-21.870
Net Area at 25th Floor					425.178

Detail of Block C1-B2

Twenty Sixth Floor area

Block	Nos	Length	x	Breadth	Area
A-1	1	0.30	X	2.000	0.60
A-2	1	0.30	X	1.315	0.39
A-3	1	5.60	X	1.450	8.12
A-4	1	2.00	X	0.300	0.60
A-5	1	1.25	X	0.300	0.38
A-6	1	0.75	X	4.750	3.56
A-7	1	2.20	X	0.950	2.09
	2	0.30	X	2.015	1.21
A-8	1	12.95	X	1.600	20.72
A-9	1	14.05	X	9.950	139.80
A-10	1	6.000	X	1.420	8.52
	2	0.300	X	0.640	0.38
	5	0.500	X	0.240	0.60
A-11	1	1.450	X	0.950	1.38
	1	0.300	X	1.350	0.41
A-12	1	12.300	X	13.265	163.16
A-13	1	9.150	X	6.600	5.49
A-14	1	2.750	X	10.050	27.64
A-15	2	0.300	X	1.350	0.81
	1	0.300	X	1.315	0.39
	1	0.300	X	2.000	0.60
A-16	1	0.300	X	1.315	0.39
	1	0.300	X	2.000	0.60
A-17	1	5.650	X	1.585	8.96
A-18	1	9.300	X	11.000	102.30
	1	1.350	X	6.340	8.56
A-20	1	1.900	X	0.300	0.57
		Total Area			507.231

Block	Nos	Length	x	Breadth	Area
Less Shafts					
S-1	1	1.640	X	0.800	1.312
S-2	1	1.550	X	0.750	1.163
S-3	1	1.650	X	0.400	0.660
S-4	1	0.560	X	1.850	1.036
S-5	2	2.600	X	0.400	2.080
S-6	2	0.660	X	0.760	1.003
S-7	1	0.650	X	1.385	0.900
S-8	1	1.050	X	1.065	1.118
S-9	1	2.400	X	1.065	2.556
S-10	1	1.800	X	1.065	1.917
S-11	1	1.650	X	1.065	1.757
		Total Area For Deduction			15.502
		Total Area			516.478
Less Stair Case & Lift wells					
L	2	2.00	X	2.80	-11.200
S	2	3.05	X	5.50	-33.550
T	1	5.40	X	4.05	-21.870
S/W	1	1.85	X	3.93	-7.261
S/W	1	2.75	X	3.67	-10.079
DH-1	1	7.01	X	4.30	-30.143
DH-2	1	9.01	X	4.30	-38.743
DH-3	1	4.20	X	2.97	-12.474
	1	5.40	X	1.50	-8.100
Net Area at 27th Floor					365.079

Detail of Block C1-B2

Twenty Seventh Floor area

Block	Nos	Length	x	Breadth	Area
A-1	1	0.30	X	2.000	0.60
A-2	1	0.30	X	1.315	0.39
A-3	1	5.60	X	0.685	2.71
A-4	1	2.00	X	0.300	0.60
A-5	1	1.25	X	0.300	0.38
A-6	1	0.75	X	4.750	3.56
A-7	1	2.20	X	0.575	1.27
	2	0.30	X	2.015	1.21
A-8	1	12.95	X	1.975	25.58
A-9	1	14.05	X	10.915	153.36
A-10	1	6.000	X	1.160	6.96
	2	0.300	X	0.640	0.38
Less	5	0.500	X	0.240	-0.60
A-11	1	12.300	X	14.350	176.51
	1	9.150	X	0.485	1.48
A-12	1	1.450	X	0.575	0.83
	1	0.300	X	1.350	0.41
A-13	1	12.050	X	11.150	134.36
A-14	1	10.650	X	1.100	11.72
A-15	2	0.300	X	1.200	0.72
	1	0.300	X	1.315	0.39
	1	0.300	X	2.000	0.60
A-17	1	5.650	X	0.485	2.74
A-18	1	1.900	X	0.300	0.57
A-19	1	1.350	X	5.390	7.28
		Total Area			533.980

Block	Nos	Length	x	Breadth	Area
Less Shafts					
S-1	1	1.640	X	0.800	1.312
S-2	1	1.550	X	0.750	1.163
S-3	1	1.650	X	0.400	0.660
S-4	1	0.560	X	1.850	1.036
S-5	2	2.600	X	0.400	2.080
S-6	2	0.660	X	0.760	1.003
S-7	1	0.650	X	1.385	0.900
S-8	1	1.050	X	1.065	1.118
S-9	1	2.400	X	1.065	2.556
S-10	1	1.800	X	1.065	1.917
S-11	1	1.650	X	1.065	1.757
		Total Area For Deduction			15.502
		Total Area			518.476
Less Stair Case & Lift wells					
L	2	2.00	X	2.80	-11.200
S	2	3.05	X	5.50	-33.550
T	1	5.40	X	4.05	-21.870
S/W	1	1.85	X	3.93	-7.261
S/W	1	2.75	X	3.67	-10.079
DH-1	1	7.01	X	4.30	-30.143
DH-2	1	9.01	X	4.30	-38.743
DH-3	1	4.20	X	2.97	-12.474
	1	5.40	X	1.50	-8.100
Net Area at 27th Floor					365.079

Twenty Eight Floor

Block	Nos	Length	x	Breadth	Area
A-1	1	6.00	X	2.660	15.96
	2	0.64	X	0.300	0.38
	1	4.60	X	5.900	27.14
	1	5.50	X	4.125	22.69
	1	3.45	X	3.045	10.49
	1	5.48	X	3.120	16.85
	1	5.25	X	3.950	12.44
	1	3.45	X	3.215	11.09
	1	3.25	X	4.530	14.72
Less Deductions					130.96
SW	1	3.05	X	4.125	-4.46
S	2	3.65	X	5.500	-38.55
	1	2.00	X	2.800	-11.20
S/W	1	3.05	X	4.530	-13.82
S2	2	0.66	X	0.760	-1.00
S3	2	2.70	X	0.370	-2.00
S-9	1	1.650	X	1.065	-1.76
S-10	1	1.800	X	1.065	-1.92
S-11	1	2.400	X	1.065	-2.56
S-12	1	1.050	X	1.065	-1.12
S-13	2	2.600	X	0.400	-2.08
S-12	2	0.660	X	0.760	-1.00
Net Area at 28th Floor					50.50

Block	Nos	Length	x	Breadth	Area
Less Shafts					
S-1	1	1.640	X	0.800	1.312
S-2	1	1.550	X	0.750	1.163
S-3	1	1.650	X	0.400	0.660
S-4	1	0.560	X	1.850	1.036
S-5	2	2.600	X	0.400	2.080
S-6	2	0.660	X	0.760	1.003
S-7	1	0.650	X	1.385	0.900
S-8	1	1.050	X	1.065	1.118
S-9	1	2.400	X	1.065	2.556
S-10	1	1.800	X	1.065	1.917
S-11	1	1.650	X	1.065	1.757
		Less Stair Case & Lift wells			
L	2	2.00	X	2.80	-11.200
S	2	3.05	X	5.50	-33.550
T	1	5.40	X	4.05	-21.870
		Net Area at 28th Floor			425.108

Murty & Machine Room

Block	Nos	Length	x	Breadth	Area
B-1	1	4.60	X	3.200	14.72
B-2	1	3.45	X	5.900	20.36
					35.08

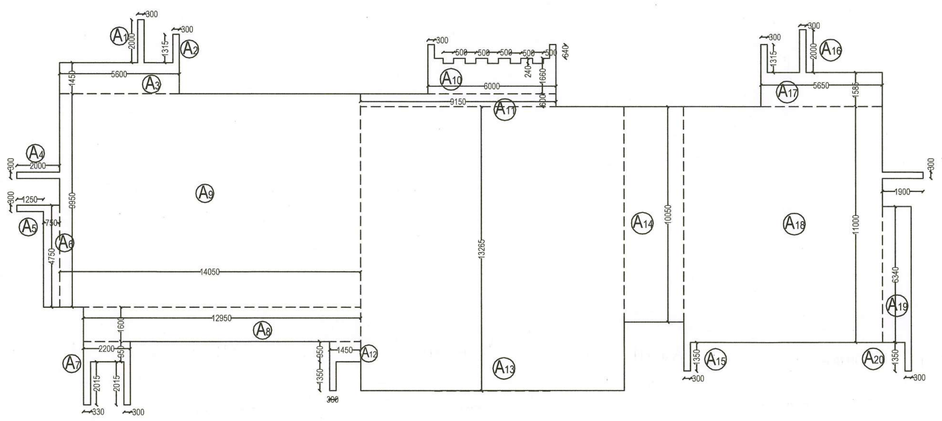

AREA CHART TEWENTY SIXTH FLOOR 507.231 SQM.

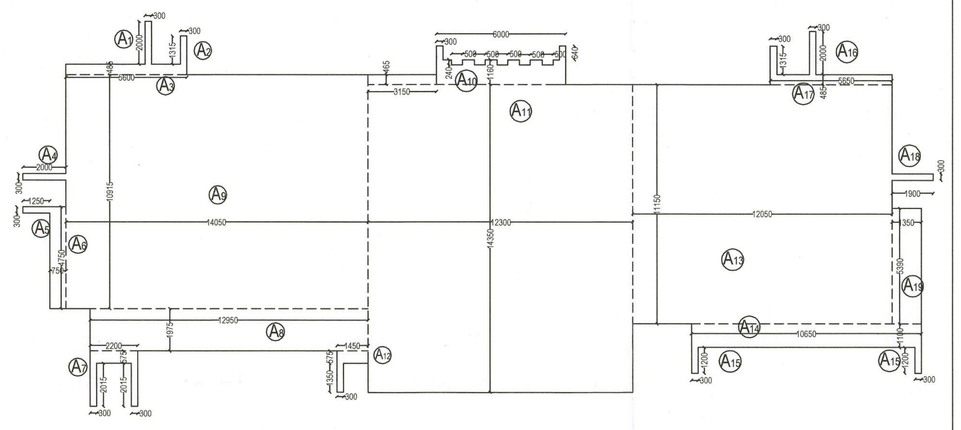

AREA CHART TEWENTY SEVENTH FLOOR 533.98 SQM.

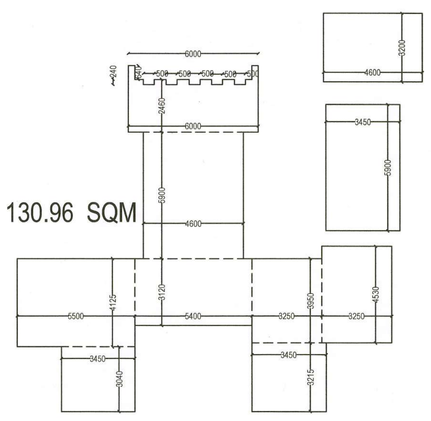

130.96 SQM

TWENTY EIGHT FLOOR

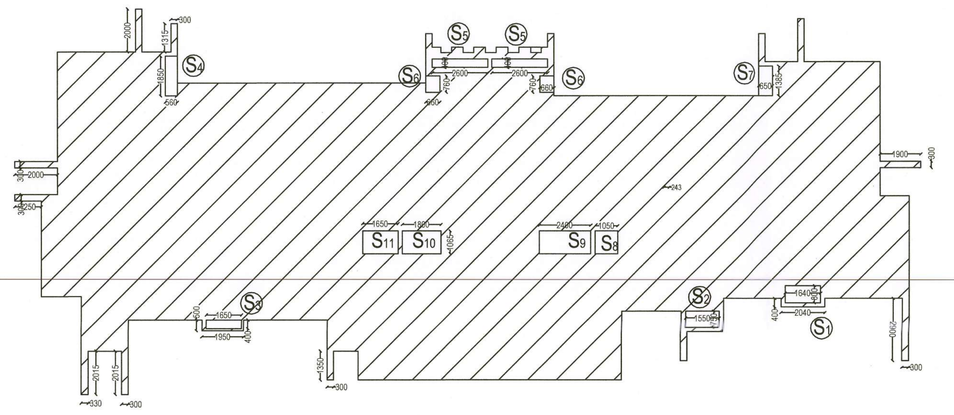

DEDCUTION SHAFTS OF GROUND FLOOR (BLOCK C1-B2) 474.343 SQM.

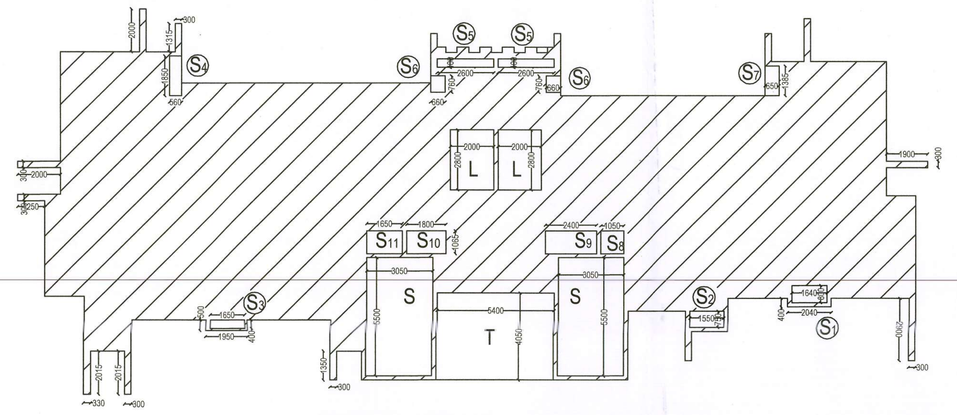

DEDCUTION SHAFTS OF FIRST TO TWENTY FLOOR (BLOCK C1-B2) 407.723 SQM.

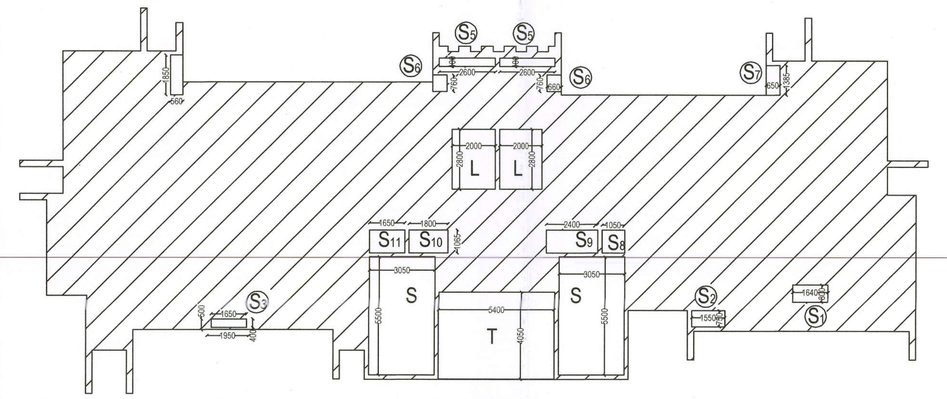

AREA CHART TWENTY FIFTH FLOOR (BLOCK C1-B2) 425.108 SQM.

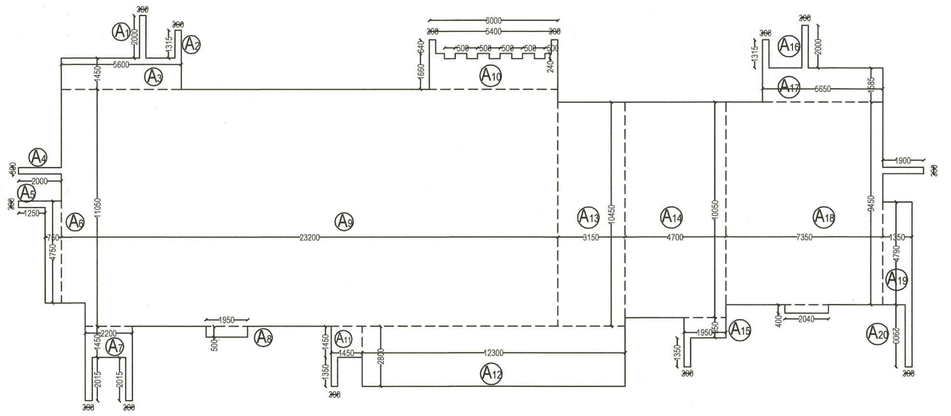

AREA CHART OF GROUND FLOOR 489.845 SQM.

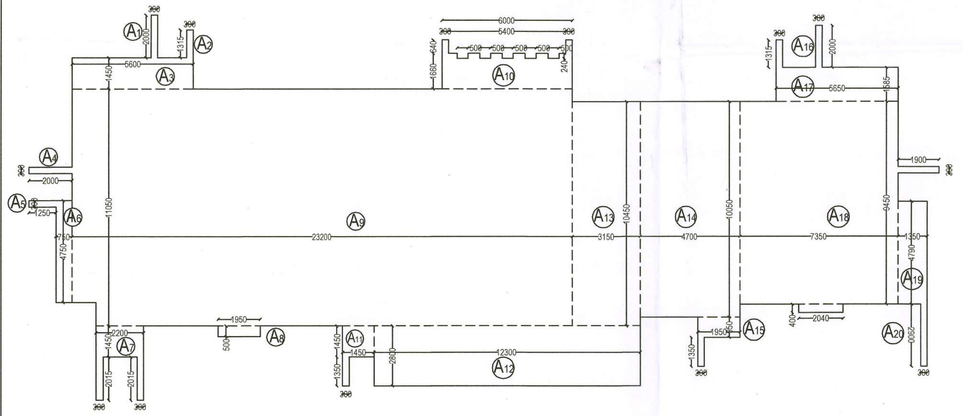

AREA CHART OF FIRST TO TWENTY FOURTH FLOOR 489.845 SQM.

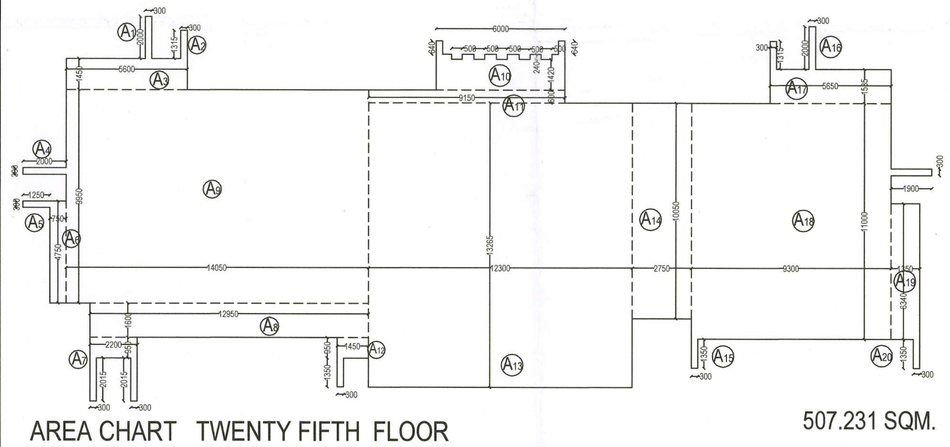

AREA CHART TWENTY FIFTH FLOOR 507.231 SQM.

SHEET NO : C1B2/003/004

Building Plans Approved by Supervising Committee (HQ).

Chairman Building Plan Committee cum Divisional Town Planner HSIIDC, IMT-Manesar

Building Plans Sanction and Plans will be valid for five year only To be read with Memo No.HSIIDC/100/IMT/M/2024/0410-408 Dated 23/08/2024 to 28/08/2029

Client

ELDECO

Eldeco Infrastructure & Properties Ltd.
201-212, 2nd Floor, Splendor Forum,
New Delhi - 110 025 (India)
Phone: +91 11 4065 5000
E-mail: contact@eldecoproperties.com

Architect
Ar. Narrouttam Kumar
CA/2014/66162
H.No. 291, New Vijay Nagar, Panipat,
Haryana - 132103

Structure Consultant
TPCL
B-74 | Sector 57 | Noida 201301
Uttar Pradesh | India
Phone :-91 120 4306800
Website:-www.tpcl.in

Notes
1. Unless otherwise mentioned all dimensions are in Millimeters.
2. Unless otherwise mentioned all levels including finished floor.
3. Unless otherwise mentioned all dimensions are shown exclusive of finishes & frames.
4. Dimensions are not to be scaled from the drawing.
5. Any discrepancies, either between written dimensions and site dimensions or within these drawings should be brought to the immediate attention of the consultant before executing the works.
6. This drawing is to be read in conjunction with all other.

SHEET NO	:	C1B2/003/004
TOWER NAME	:-	BLOCK C1B2
PROJECT NAME	:-	ELDECO FAIRWAY RESERVE

Address
GROUP HOUSING PLOT NO-02 SECTOR-80 HSIIDC IMT, GURUGRAM -122050 (HR) BELONGING TO:- M/S ELEDCO INFRASTRUCTURE & PROPERTIES LIMITED

For Eldeco Infrastructure & Properties Ltd.
Authorised Signatory

signature of authorised signatory

AR. NARROUTTAM KUMAR
CA/2014/66162
JAI SHRI ARCHITECTURE
+91-9992314086

signature of architect

signature of structural engineer

signature of proof consultant

signature of geo technical engineer