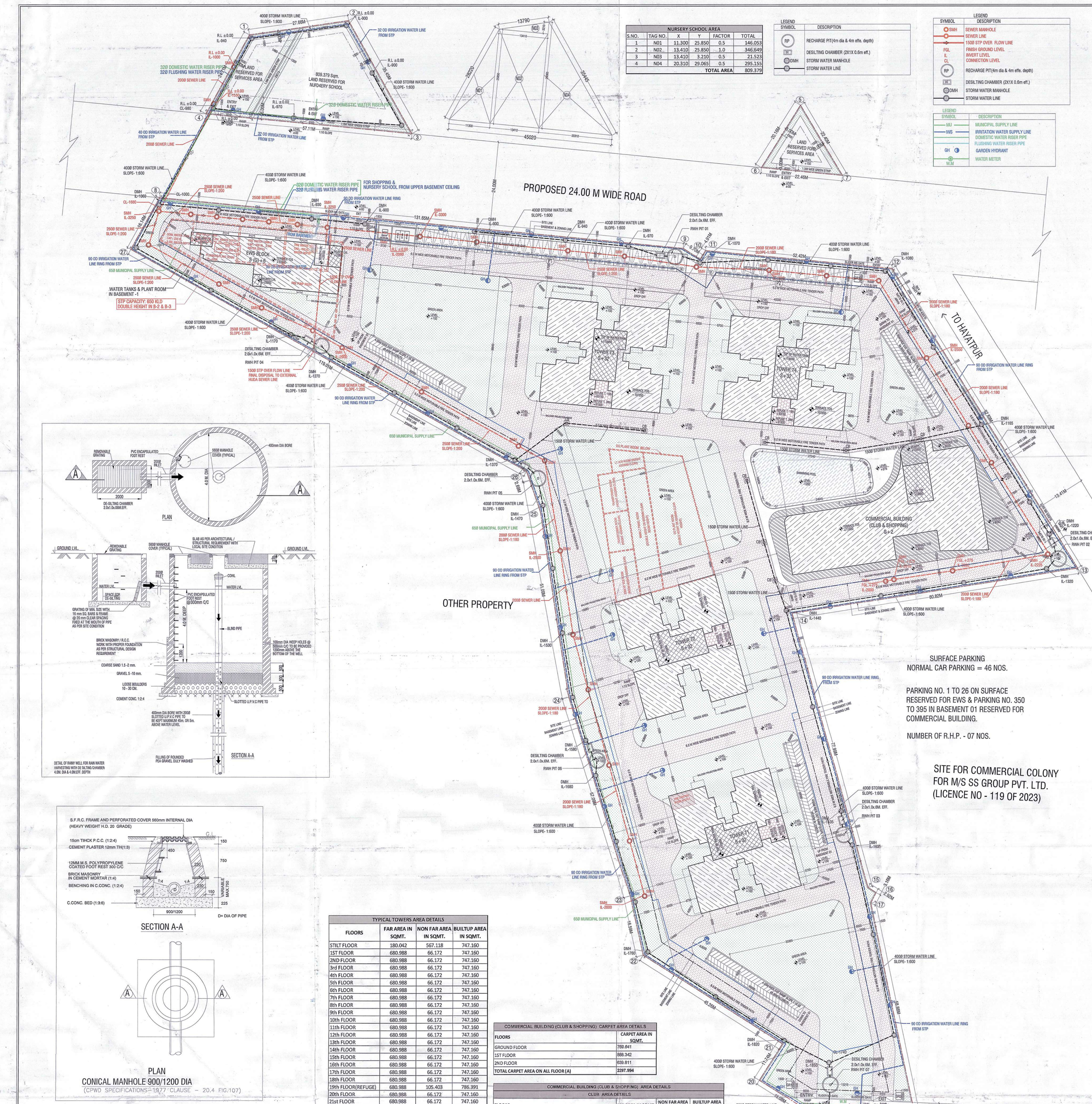

NURSERY SCHOOL AREA					
S.NO.	TAG NO.	X	Y	FACTOR	TOTAL
1	N01	11.300	25.850	0.5	146.053
2	N02.	13.410	25.850	1.0	346.649
3	N03	13.410	3.210	0.5	21.523
4	N04	20.310	29.065	0.5	295.155
				TOTAL AREA	809.379

LEGEND

SYMBOL	DESCRIPTION
RP	RECHARGE PIT(4m dia & 4m effe. depth)
DC	DESILTING CHAMBER (2X1X 0.6m eff.)
DMH	STORM WATER MANHOLE
	STORM WATER LINE

LEGEND

SYMBOL	DESCRIPTION
SMH	SEWER MANHOLE
	SEWER LINE
	1500 STP OVER FLOW LINE
FGL / IL / CL	FINISH GROUND LEVEL / INVERT LEVEL / CONNECTION LEVEL
RP	RECHARGE PIT(4m dia & 4m effe. depth)
DC	DESILTING CHAMBER (2X1X 0.6m eff.)
DMH	STORM WATER MANHOLE
	STORM WATER LINE

LEGEND

SYMBOL	DESCRIPTION
MJ	MUNICIPAL SUPPLY LINE
IWS	IRRIGATION WATER SUPPLY LINE
	DOMESTIC WATER RISER PIPE
	FLUSHING WATER RISER PIPE
GH	GARDEN HYDRANT
W.M	WATER METER

AREA DETAILS			
DESCRIPTION	PERMISSIBLE		
	(SQ.M.)		
TOTAL PLOT AREA	25967.056	6.4166	Acres
GROUND COVERAGE (60%)	15580.234		1 Acre = 4046.856
RESIDENTIAL PLOT AREA (96.11%) OF THE TOTAL PLOT AREA (A)	24956.938		
RESIDENTIAL FAR AREA @ 3.5 (A X 3.5) = (B)	87349.282	336.39%	
RESIDENTIAL GREEN FAR AREA (GRIHA) @ 12% OF (A X 12%) = (C)	2994.833	11.53%	
TOTAL RESIDENTIAL FAR AREA INCLUDING GREEN FAR (GRIHA) (D) = (B+C)	90344.115	347.92%	
COMMERCIAL BUILDING (CLUB AND SHOPPING) AREA @ 3.89% OF THE TOTAL PLOT AREA = (E)	1010.118		
COMMERCIAL BUILDING (CLUB AND SHOPPING) FAR @ 3.5 (E X 3.5) = (F)	3535.415		
COMMERCIAL BUILDING (CLUB AND SHOPPING) GREEN FAR (GRIHA) @ 12% OF (E) = (G)	121.214		
TOTAL COMMERCIAL BUILDING (CLUB AND SHOPPING) FAR AREA INCLUDING GREEN FAR (GRIHA) (H) = (F+G)	3656.629	14.08%	
TOTAL FAR	94000.743	362.00%	
15 NOS EWS UNITS REQUIRED PER 100 TOTAL UNITS	90.353	91	
REQUIRED ECS (1.0 ECS FOR EACH MAIN UNIT) FOR RESIDENTIAL	(1.0 X 512)	512	
REQUIRED ECS (1.0 ECS FOR EACH 50 SQM CARPET AREA) FOR COMMERCIAL	(2297.994/50)	45.96	
GREEN AREA REQUIRED = 15 % OF TOTAL PLOT AREA	3895.058		
DESCRIPTION	PROPOSED		
EWS FAR	2455.665		
TOWER (T1,T2,T3 & T4) FAR	87886.685		
TOTAL RESIDENTIAL FAR (X)	90342.350		
COMMERCIAL BUILDING (CLUB AND SHOPPING) FAR (Y)	3650.700		
TOTAL FAR (X+Y)	93993.050	361.97%	
GROUND COVERAGE	4914.479	18.93%	
NO. OF DWELLING UNITS		512	
POPULATION @ 5.0 PERSON PER DWELLING UNIT (P1)	(5X512)	2560	
10% OF MAIN UNITS REQUIRED SERVICE PERSIONAL UNIT = MINIMUM 10% OF MAIN UNITS	51.2		
PROPOSED SERVICE PERSIONAL UNIT = (P2) = 100% OF MAIN UNITS	512		
POPULATION @ 2 PERSON PER SERVICE PERSIONAL (P2)	(2X512)	1024	
NO. OF EWS UNITS PROPOSED		91	
POPULATION @2 PERSON PER EWS UNIT (P3)	(2X 91)	182	
TOTAL POPULATION (P) = (P1+P2+P3)	(2560+1024+182)	3766	
TOTAL DENSITY (MINIMUM 540 AND MAXIMUM 660)	600 PPA(± 10%)	586.915	PPA (SAY 587 PPA)
PROVIDED ECS	1018.761		
PROPOSED GREEN AREA	7302.449	28.12%	

S.NO.	DESCRIPTION /FLOOR	AREA (SQ.M.)	SERVICES AREA (SQ.M.)	PARKING AREA (SQ.M.)
1	BASEMENT 1	18,539.367	3,143.010	15,396.357
2	BASEMENT-2	18,297.860	2,853.870	15,443.990
	TOTAL	36,837.227	5,996.880	30,840.347

PARKING (ECS) CALCULATION					
	UP TO 100 SQM.	0.5 ECS	REQUIRED		
	UP TO 150 SQM.	1.0 ECS	REQUIRED		
	MORE THAN 150 SQM.	1.50 ESC	REQUIRED		
	ECS REQUIRED FOR 512 UNITS	512	1.0 ECS/MAIN UNIT	512.00	ECS
	5% ECS REQUIRED FOR EWS	0.05*512	0.05 ECS/ MAIN UNITS	25.60	ECS
	REQUIRED ECS FOR COMMERCIAL	1.0 ECS FOR EACH 50 SQM. CARPET AREA	2297.994	45.96	ECS
	TOTAL ECS REQUIRED			583.56	ECS
	DESCRIPTION				
S No.	PARKING DETAIL ACCORDING TO ECS	PARKING AREA IN (SQM)	REQUIRED	ECS	PROVIDED PARKING
1	PARKING IN BASEMENT-01 (A)	15396.357	@ 32 SQ.MT PER ECS	481.14	438
2	PARKING IN BASEMENT-02 (B)	15443.990	@ 32 SQ.MT PER ECS	482.62	440
3	COVERED CAR PARKING (A+B)			963.76	878
4	PARKING ON SURFACE	1265.000	@ 23 SQ.MT PER ECS	55.00	46
	TOTAL PARKING ECS			1018.761	924

GROUND COVERAGE						
DESCRIPTION	TOWERS	COMMERCIAL BUILDING (CLUB & SHOPPING)	EWS	GUARD ROOMS	METER ROOM	TOTAL
GROUND COVERAGE OF ONE TOWER	747.160					
TOTAL GROUND COVERAGE	2,988.640	1,422.698	442.605	12.000	48.536	4,914.479

SURFACE PARKING				
S.NO.	LENGTH IN M	WIDTH IN M	AREA IN SQM	
P1	75	11	825	
P2	40	11	440	
		TOTAL	1265	
	1 ECS @ 23 SQM		55	ECS

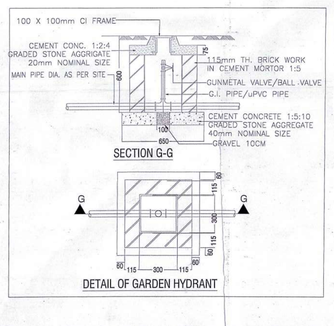

TYPICAL TOWERS AREA DETAILS			
FLOORS	FAR AREA IN SQMT.	NON FAR AREA IN SQMT.	BUILTUP AREA IN SQMT.
STILT FLOOR	180.042	567.118	747.160
1ST FLOOR	680.988	66.172	747.160
2ND FLOOR	680.988	66.172	747.160
3rd FLOOR	680.988	66.172	747.160
4th FLOOR	680.988	66.172	747.160
5th FLOOR	680.988	66.172	747.160
6th FLOOR	680.988	66.172	747.160
7th FLOOR	680.988	66.172	747.160
8th FLOOR	680.988	66.172	747.160
9th FLOOR	680.988	66.172	747.160
10th FLOOR	680.988	66.172	747.160
11th FLOOR	680.988	66.172	747.160
12th FLOOR	680.988	66.172	747.160
13th FLOOR	680.988	66.172	747.160
14th FLOOR	680.988	66.172	747.160
15th FLOOR	680.988	66.172	747.160
16th FLOOR	680.988	66.172	747.160
17th FLOOR	680.988	66.172	747.160
18th FLOOR	680.988	66.172	747.160
19th FLOOR(REFUGE)	680.988	105.403	786.391
20th FLOOR	680.988	66.172	747.160
21st FLOOR	680.988	66.172	747.160
22nd FLOOR	680.988	66.172	747.160
23rd FLOOR	680.988	66.172	747.160
24th FLOOR	680.988	66.172	747.160
25th FLOOR	680.988	66.172	747.160
26th FLOOR	680.988	66.172	747.160
27th FLOOR	680.988	66.172	747.160
28th FLOOR(REFUGE)	680.988	105.403	786.391
29th FLOOR	680.988	66.172	747.160
30th FLOOR	680.988	66.172	747.160
31st FLOOR	680.988	66.172	747.160
32nd FLOOR	680.988	66.172	747.160
TERRACE (MUMTY & MACHINE ROOM)		200.90	200.900
TOTAL AREA ON ALL FLOOR	21971.67	2963.968	24935.639
TOWERS	FAR AREA IN SQMT.	NON FAR AREA IN SQMT.	
TOWER T1 AREA	21971.671	2963.968	24935.639
TOWER T2 AREA	21971.671	2963.968	24935.639
TOWER T3 AREA	21971.671	2963.968	24935.639
TOWER T4 AREA	21971.671	2963.968	24935.639
TOTAL TOWER (T1,T2,T3 & T4) AREA	87886.685	11855.870	99742.556

COMMERCIAL BUILDING (CLUB & SHOPPING) CARPET AREA DETAILS	
FLOORS	CARPET AREA IN SQMT.
GROUND FLOOR	769.641
1ST FLOOR	888.342
2ND FLOOR	639.811
TOTAL CARPET AREA ON ALL FLOOR (A)	2297.994

COMMERCIAL BUILDING (CLUB & SHOPPING) AREA DETAILS			
CLUB AREA DETAILS			
FLOORS	FAR AREA IN SQMT.	NON FAR AREA IN SQMT.	BUILTUP AREA IN SQMT.
GROUND FLOOR	992.700	0.000	992.700
1ST FLOOR	1254.549	174.252	1428.801
2ND FLOOR	983.433	126.390	1109.823
TERRACE (MUMTY & MACHINE ROOM)	0.000	112.08	112.080
TOTAL AREA ON ALL FLOOR (A)	3180.702	392.702	3573.404
SHOPPING AREA DETAILS			
FLOORS	FAR AREA IN SQMT.	NON FAR AREA IN SQMT.	BUILTUP AREA IN SQMT.
TOTAL AREA AT GROUND FLOOR (B)	469.998	0.000	469.998
TOTAL COMMERCIAL FAR AREA CLUB + SHOPPING (A+B)	3650.700	392.702	4043.402

EWS AREA DETAILS			
FLOORS	FAR AREA IN SQMT.	NON FAR AREA IN SQMT.	BUILTUP AREA IN SQMT.
STILT FLOOR	89.263	353.343	442.605
1ST FLOOR	394.400	39.735	434.135
2ND FLOOR	394.400	39.735	434.135
3rd FLOOR	394.400	39.735	434.135
4th FLOOR	394.400	39.735	434.135
5th FLOOR	394.400	39.735	434.135
6th FLOOR	394.400	39.735	434.135
TERRACE (MUMTY & OHT)		64.675	64.675
TOTAL AREA ON ALL FLOOR	2466.665	656.428	3112.093

TOTAL BUILTUP AREA		
S. NO.		AREA IN SQM
1	BASEMENTS	36837.227
2	ALL 4 TOWERS	99742.556
3	COMMERCIAL BUILDING (CLUB & SHOPPING)	4043.402
4	EWS	3112.093
5	METER ROOM	48.536
6	4 NOS. GUARD ROOMS	12.000
	TOTAL	143795.814

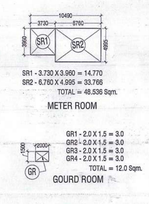

Checked and found ok for Public Health (Internal) Service only subject to comments in in forwarding letter No. 165341 Dt. 20/06/2024
Superintending Engineer (HQ)
For Chief Engineer-I
HSVP, Panchkula

S.T.P. (HQ) Member Secretary BPAC
S.T.P. (G) Member BPAC
C.T.P. (T.M.) Chairman BPAC
AD PA ATP
DDT (T) MEMBER BPAC

SUBMISSION DRAWING

KEY PLAN

PRINCIPAL ARCHITECT

ACPL ISO 9001:2015
ACPL Design Ltd. Architecture Management Planning
E-124 Basti Extension, +91 11 24622166 New Delhi 110055, India +91 11 25545705
www.acplindia.com E: sanjiv@acplindia.com, +91 11 24634208

CLIENT

NORTH STAR TOWERS PRIVATE LIMITED
77, SS House, Bhagwan Mahaveer Marg, Sector 44, Gurugram, Haryana 122003

PROJECT

PROPOSED BUILDING PLAN OF MIXED LAND USE COLONY UNDER TOD POLICY (96% RESIDENTIAL AND 4% COMMERCIAL) FOR AN AREA MEASURING 6.4166 ACRES (LICENCE NO. 265 OF 2023 DATED 19/12/2023) IN THE REVENUE ESTATE OF VILLAGE BADHA & WAWADA FATEHPUR, SECTOR-90, GURUGRAM, BEING DEVELOPED BY NORTH STAR TOWERS PRIVATE LIMITED.

For North Star Towers Pvt. Ltd.
Authorised Signatory
OWNER/AUTH. SIGNATURE

MANEET BHANGAR ARCHITECT CA/97/14117
ARCHITECT'S SIGNATURE

DRAWING TITLE

SITE PLAN

DRAWING NO. A-01

SCALE : 1:400