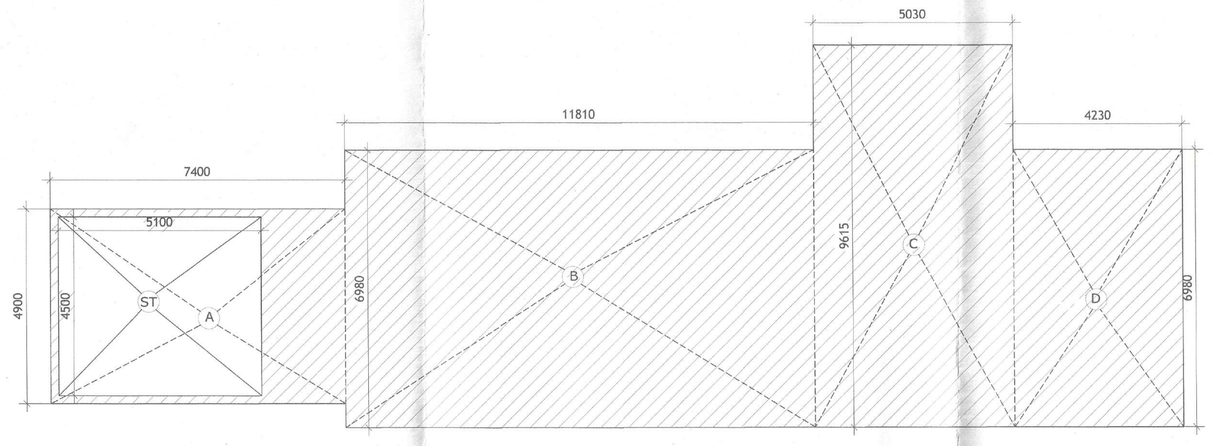

CRECHE AREA DIAGRAM

CRECHE AREA DETAIL							
A	7.400	X	4.900	X	1	36.260	SQ.M.
B	11.810	X	6.980	X	1	82.434	SQ.M.
C	5.030	X	9.615	X	1	48.363	SQ.M.
D	4.230	X	6.980	X	1	29.525	SQ.M.
TOTAL						196.583	SQ.M.
LESS AREA							
ST	5.100	X	4.500	X	1	22.950	SQ.M.
						22.950	SQ.M.
CRECHE AREA= 196.583 - 22.950 =						**173.633**	**SQ.M.**

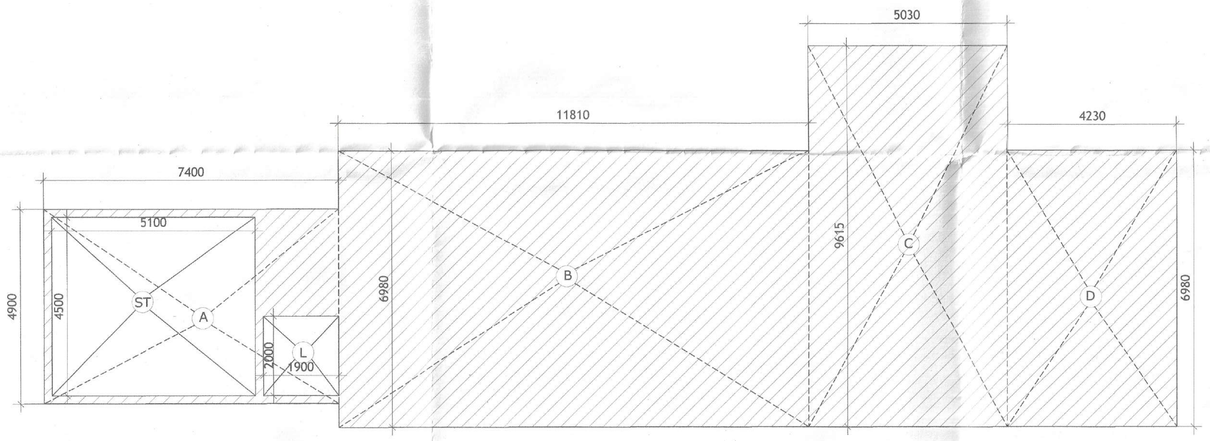

COMMUNITY AREA DIAGRAM

COMMUNITY AREA DETAIL							
A	7.400	X	4.900	X	1	36.260	SQ.M.
B	11.810	X	6.980	X	1	82.434	SQ.M.
C	5.030	X	9.615	X	1	48.363	SQ.M.
D	4.230	X	6.980	X	1	29.525	SQ.M.
TOTAL						196.583	SQ.M.
LESS AREA							
ST	5.100	X	4.500	X	1	22.950	SQ.M.
L	1.900	X	2.000	X	1	3.800	SQ.M.
	1.70	X	3.93 = 6.68(C)(A+B+C)			33.43	SQ.M.
COMMUNITY AREA= 196.583–33.43= 163.153							**SQ.M.**

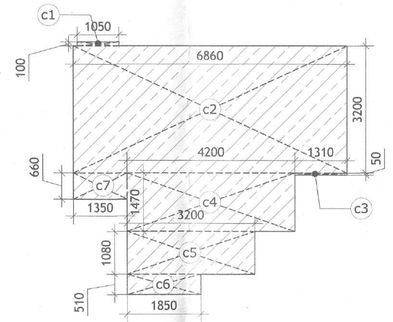

1 BHK TYPE I AREA DIAGRAM

1BHK TYPE I CARPET AREA							
c1	1.050	X	0.100	X	1	0.105	SQ.M.
c2	6.860	X	3.200	X	1	21.952	SQ.M.
c3	1.310	X	0.050	X	1	0.066	SQ.M.
c4	4.200	X	1.470	X	1	6.174	SQ.M.
c5	3.200	X	1.080	X	1	3.456	SQ.M.
c6	1.850	X	0.510	X	1	0.944	SQ.M.
c7	1.350	X	0.660	X	1	0.891	SQ.M.
TOTAL						**33.587**	**SQ.M.**

1 BHK TYPE I BALCONY AREA							
BAL. I	1.160	X	1.500	X	1	1.740	SQ.M.
TOTAL						**1.740**	**SQ.M.**

1 BHK TYPE I BALCONY AREA							
BAL. III	1.210	X	1.500	X	1	1.815	SQ.M.
TOTAL						**1.815**	**SQ.M.**

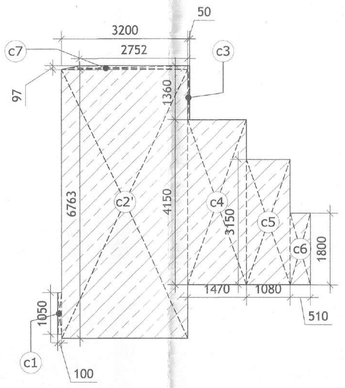

1 BHK TYPE II AREA DIAGRAM

1BHK TYPE II CARPET AREA							
c1	1.050	X	0.100	X	1	0.105	SQ.M.
c2'	6.763	X	3.200	X	1	21.642	SQ.M.
c3	1.360	X	0.050	X	1	0.068	SQ.M.
c4	4.150	X	1.470	X	1	6.101	SQ.M.
c5	3.150	X	1.080	X	1	3.402	SQ.M.
c6	1.800	X	0.510	X	1	0.918	SQ.M.
c7	TRAPEZIUM		1/2 X (2.752 + 3.200) X 0.097			0.289	SQ.M.
TOTAL						**32.524**	**SQ.M.**

1 BHK TYPE II BALCONY AREA							
BAL. II	1.360	X	1.500	X	1	2.040	SQ.M.
TOTAL						**2.040**	**SQ.M.**

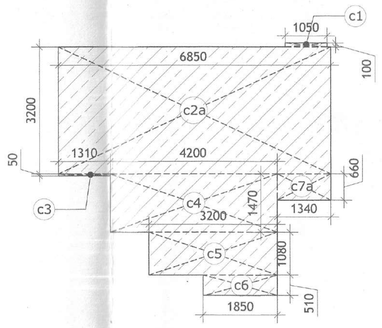

1 BHK TYPE III AREA DIAGRAM

1BHK TYPE III CARPET AREA							
c1	1.050	X	0.100	X	1	0.105	SQ.M.
c2a	6.850	X	3.200	X	1	21.920	SQ.M.
c3	1.310	X	0.050	X	1	0.066	SQ.M.
c4	4.200	X	1.470	X	1	6.174	SQ.M.
c5	3.200	X	1.080	X	1	3.456	SQ.M.
c6	1.850	X	0.510	X	1	0.944	SQ.M.
c7a	1.340	X	0.660	X	1	0.884	SQ.M.
TOTAL						**33.548**	**SQ.M.**

1 BHK TYPE II BALCONY AREA							
BAL. IV	1.110	X	1.500	X	1	1.665	SQ.M.
TOTAL						**1.665**	**SQ.M.**

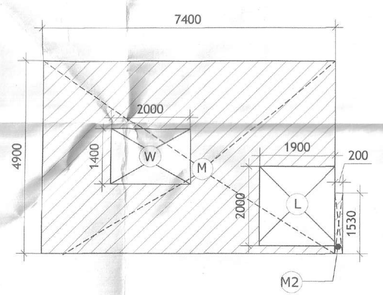

MUMTY AREA DIAGRAM

CRECHE / COMMUNITY MUMTY AREA DETAIL							
M	7.400	X	4.900	X	1	36.260	SQ.M.
M2	0.200	X	1.530	X	1	0.306	SQ.M.
TOTAL						36.566	SQ.M.
LESS AREA							
L	1.900	X	2.000	X	1	3.800	SQ.M.
W	2.000	X	1.400	X	1	2.800	SQ.M.
						6.600	SQ.M.
MUMTY AREA= 36.566 - 6.410 =						**29.966**	**SQ.M.**

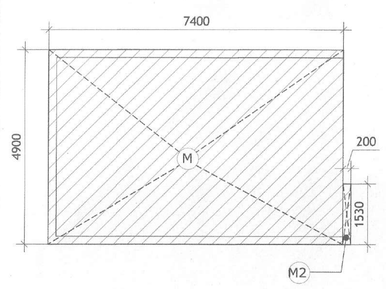

M.ROOM / W.TANK AREA DIAGRAM

CRECHE / COMMUNITY M.ROOM / W.TANK AREA DETAIL							
M	7.400	X	4.900	X	1	36.260	SQ.M.
M2	0.200	X	1.530	X	1	0.306	SQ.M.
TOTAL						36.566	SQ.M.
M.ROOM / W.TANK AREA =						**36.566**	**SQ.M.**

BUILT UP AREA CALCULATION CRECHE / COMMUNITY

CRECHE BUILT UP AREA = CRECHE AREA + ST
= 173.633 + 22.950 =196.583 SQ.M

COMMUNITY BUILT UP AREA = COMMUNITY AREA + ST
= 163.153 + 22.950
= 186.103 SQM

CRECHE / COMMUNITY GROUND COVERAGE = BUILT OF CRECHE AREA
= 173.633 + 22.950 =196.583 SQ.M

SUBMISSION DRAWING

CLIENT

M/S. SIGNATURE GLOBAL (INDIA) PRIVATE LIMITED
Signature Global, 1308 Dr. Gopal Das Building
28 Barakhamba Road C.P. New Delhi

PROJECT TITLE
PROPOSED REVISED BUILDING PLAN OF AFFORDABLE GROUP HOUSING COLONY FOR AN AREA MEASURING 5.444 ACRES (LICENCE NO. 89 OF 2019 DATED 02/08/2019 & LICENNCE NO 02 OF 2022 DATED 06.01.2022) IN SECTOR-89, GURUGRAM MANESAR URBAN COMPLEX BEING DEVELOPED BY RAMPRASTHA SARE LAND HOLDING COMPANY ONE PVT. LTD. AND OTHERS IN COLLABORATION WITH SIGNATURE GLOBAL INDIA PVT. LTD.

MEP Consultant:
Consummate Engineering Services Pvt. Ltd.
B - 67, Sector 67, Noida,
Uttar Pradesh - 201301
Tel : +91- 0120 – 2303500
E-mail: mail@cespl.in

Structure Consultant:
NNC DESIGN INTERNATIONAL
G-70, 2nd floor, Jaswant Plaza, Main Sarita Vihar Road,
Okhla, New Delhi - 110025
Tel : +91-11-26940734/5/6/7 Fax: +91-11-26940738
E-mail: nnc_consultants@hotmail.com

R.K.& ASSOCIATES
Architects, Engineers & Planners
E-31, GREEN PARK MAIN, NEW DELHI - 110016, INDIA
Tel. : 2696-3158, 2651-6751, 2656-7357
Fax: (011) 2686-2540 E-mail : rka.architects@gmail.com

ARCHITECT'S SIGNATURE
ROHIT GARG
CA/94/17868

OWNER'S SIGNATURE

DRAWING TITLE (SUBMISSION DRAWING)
TOWER T7 & CRECHE / COMMUNITY AREAS

N W E S

DRG. NO. 16

SCALE - 1:100

DATE - FEB 2023

This is a "PROVISIONAL BUILDING PLAN" approved only for the purpose of inviting objections from the general public

A.T.P. (HQ) Member B.P.A.C. | S.T.P. (HQ) Member Secretary B.P.A.C. | S.T.P. (HQ) Member B.P.A.C. | D.D.(HQ) Member B.P.A.C.

JD PA ATP

Consultant Architect

ATP(HQ)

(Dinesh Kumar) PA(HQ)

DD (HQ) Member BPAC

TO BE READ WITH THIS OFFICE MEMO NO.:
DATED :