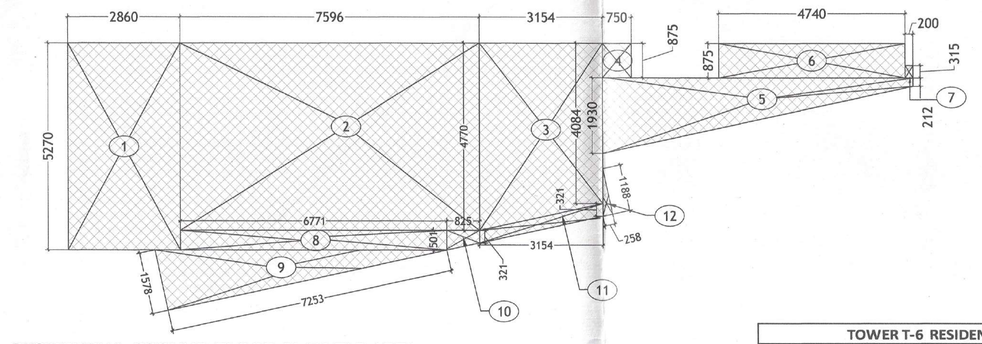

RESIDENTIAL GROUND FLOOR PLAN FAR AREA DIAGRAM

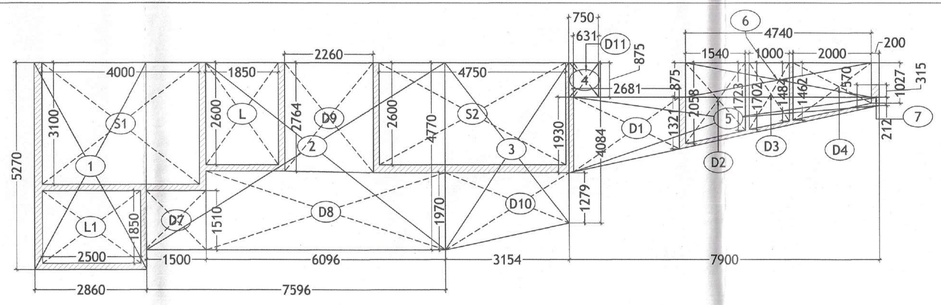

RESIDENTIAL FIRST FLOOR PLAN FAR AREA DIAGRAM

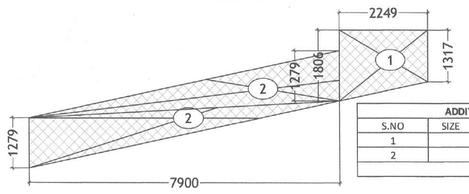

ADDITIONAL AREA DIAGRAM FOR GROUND COVERAGE (G)

ADDITIONAL AREA FOR GROUND COVERAGE (G)				
S.NO	SIZE	NO.	TOTAL	SQ.M.
1	1/2 x (1.806 +1.317) x 2.249		3.512	SQ.M.
2	2X1/2 x 7.900 X 1.279		10.104	SQ.M.
TOTAL			13.616	SQ.M.

TOWER T-6 RESIDENTIAL GROUND FLOOR F.A.R. AREA DETAIL							
S.NO	SIZE				NO.	TOTAL	SQ.M.
1	2.860	X	5.270	X	1	15.072	SQ.M.
2	7.596	X	4.770	X	1	36.233	SQ.M.
3	1/2x(4.77+4.084)x3.154					13.963	SQ.M.
4	0.750	X	0.875	X	1	0.656	SQ.M.
5	1/2x(1.930+0.212)x7.900					8.461	SQ.M.
6	4.740	X	0.875	X	1	4.148	SQ.M.
7	0.200	X	0.315	X	1	0.063	SQ.M.
8	6.771	X	0.501	X	1	3.392	SQ.M.
9	1/2x7.253X1.578					5.723	SQ.M.
10	1/2x(0.501+0.321)x.825					0.339	SQ.M.
11	1/2x(0.321+0.321)x3.154					1.012	SQ.M.
12	1/2x1.188X.258					0.153	SQ.M.
TOTAL						89.215	SQ.M.

TOWER T-6 RESIDENTIAL FIRST FLOOR F.A.R. AREA DETAIL							
S.NO	SIZE				NO.	TOTAL	SQ.M.
1	2.860	X	5.270	X	1	15.072	SQ.M.
2	7.596	X	4.770	X	1	36.233	SQ.M.
3	1/2x(4.77+4.084)x3.154					13.963	SQ.M.
4	0.750	X	0.875	X	1	0.656	SQ.M.
5	1/2x(1.930+0.212)x7.900					8.461	SQ.M.
6	4.740	X	0.875	X	1	4.148	SQ.M.
7	0.200	X	0.315	X	1	0.063	SQ.M.
TOTAL						78.596	SQ.M.
LESS AREA (FOR FIRST FLOOR)							
S1	4.000	X	3.100	X	1	12.400	SQ.M.
S2	4.750	X	2.600	X	1	12.350	SQ.M.
L	1.850	X	2.600	X	1	4.810	SQ.M.
L1	2.500	X	1.850	X	1	4.625	SQ.M.
D1	1/2 x (1.904 +1.321) x 2.681					4.323	SQ.M.
D2	1/2 x (2.058 + 1.723) x 1.540					2.911	SQ.M.
D3	1/2 x (1.702 + 1.484) x1.000					1.593	SQ.M.
D4	1/2 x (1.462 +1.027) x 2.000					2.489	SQ.M.
D7	1.500	X	1.510	X	1	2.265	SQ.M.
D8	6.096	X	1.970	X	1	12.009	SQ.M.
D9	2.260	X	2.764	X	1	6.247	SQ.M.
D10	1/2 x (1.972 +1.279) x 3.154					5.127	SQ.M.
D11	0.631	X	0.873	X	1	0.551	SQ.M.
TOTAL						71.700	SQ.M.
FIRST FLOOR F.A.R. AREA						**6.896**	**SQ.M.**

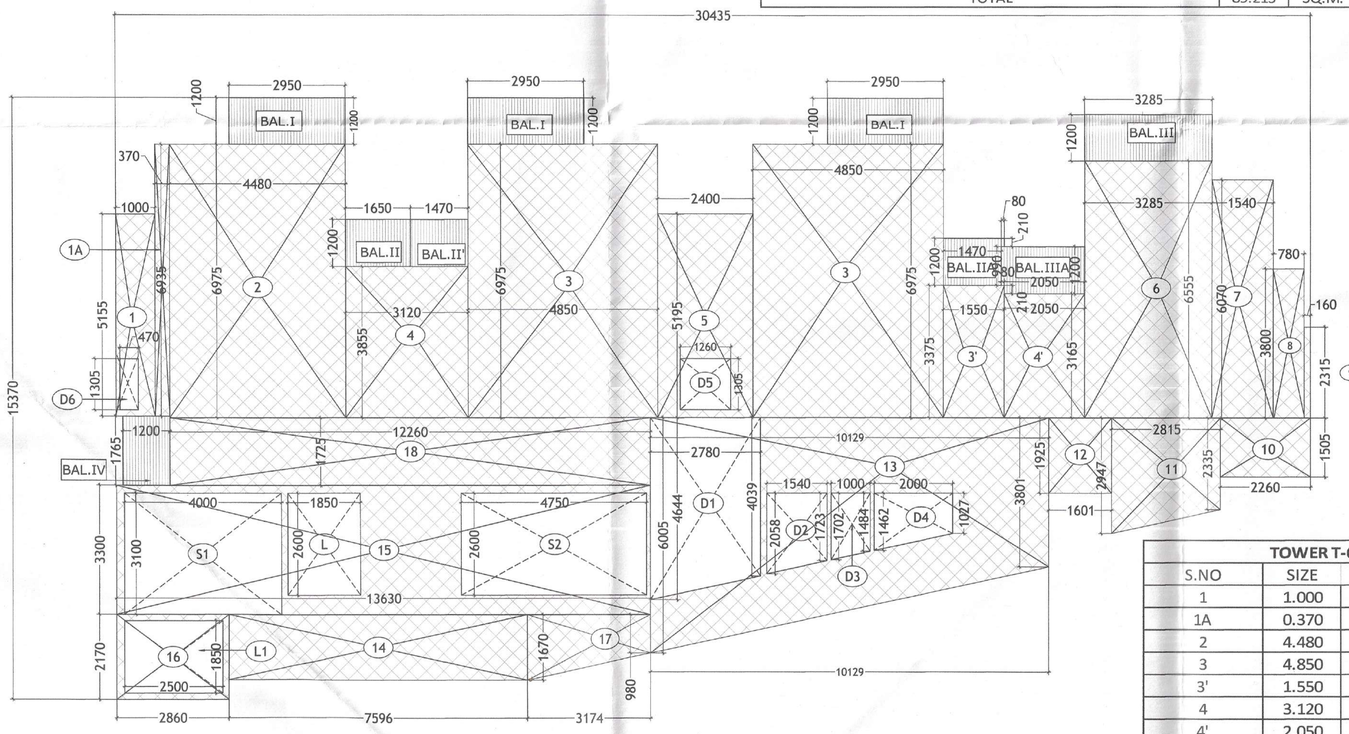

TOWER T-6 2ND TO 9TH FLOOR AREA DIAGRAM

TOWER T-6 TYPICAL FLOOR (2ND TO 9TH) AREA DETAIL							
S.NO	SIZE				NO.	TOTAL	SQ.M.
1	1.000	X	5.155	X	1	5.155	SQ.M.
1A	0.370	X	6.935	X	1	2.566	SQ.M.
2	4.480	X	6.975	X	1	31.248	SQ.M.
3	4.850	X	6.975	X	2	67.658	SQ.M.
3'	1.550	X	3.375	X	1	5.231	SQ.M.
4	3.120	X	3.855	X	1	12.028	SQ.M.
4'	2.050	X	3.165	X	1	6.488	SQ.M.
5	2.400	X	5.195	X	1	12.468	SQ.M.
6	3.285	X	6.555	X	1	21.533	SQ.M.
7	1.540	X	6.070	X	1	9.348	SQ.M.
8	0.780	X	3.800	X	1	2.964	SQ.M.
9	0.160	X	2.315	X	1	0.370	SQ.M.
10	2.260	X	1.505	X	1	3.401	SQ.M.
11	1/2 x (2.947 + 2.335) x 2.815					7.434	SQ.M.
12	1.601	X	1.925	X	1	3.082	SQ.M.
13	1/2 x (3.801 +6.005) x 10.129					49.662	SQ.M.
14	7.596	X	1.670	X	1	12.685	SQ.M.
15	13.630	X	3.300	X	1	44.979	SQ.M.
16	2.860	X	2.170	X	1	6.206	SQ.M.
17	1/2 x (1.670 + 0.980) x 3.174					4.206	SQ.M.
18	12.260	X	1.725	X	1	21.149	SQ.M.
TOTAL						329.862	SQ.M.
LESS AREA (FOR TYPICAL FLOOR)							
S1	4.000	X	3.100	X	1	12.400	SQ.M.
S2	4.750	X	2.600	X	1	12.350	SQ.M.
L	1.850	X	2.600	X	1	4.810	SQ.M.
L1	2.500	X	1.850	X	1	4.625	SQ.M.
D1	1/2 x (4.644 + 4.039) x 2.780					12.069	SQ.M.
D2	1/2 x (2.058 + 1.723) x 1.540					2.911	SQ.M.
D3	1/2 x (1.702 + 1.484) x1.000					1.593	SQ.M.
D4	1/2 x (1.462 +1.027) x 2.000					2.489	SQ.M.
D5	0.470	X	1.305	X	1	0.613	SQ.M.
D6	1.260	X	1.305	X	1	1.644	SQ.M.
TOTAL						55.505	SQ.M.
TYPICAL FLOOR F.A.R. AREA						**274.356**	**SQ.M.**

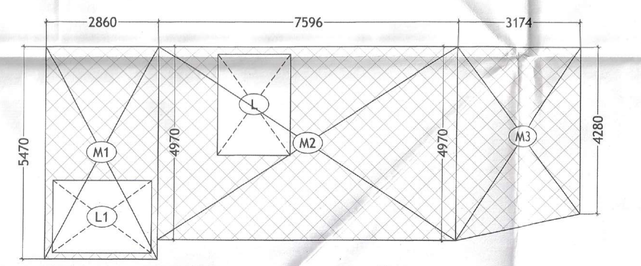

MUMTY AREA DIAGRAM

TOWER T-6 MUMTY AREA DETAIL							
M1	2.860	X	5.470	X	1	15.644	SQ.M.
M2	7.596	X	4.970	X	1	37.752	SQ.M.
M3	1/2 x (4.970 +4.280) x 3.174					14.680	SQ.M.
TOTAL						68.076	SQ.M.
LESS AREA (FOR TYPICAL FLOOR)							
L	1.850	X	2.600	X	1	4.810	SQ.M.
L1	2.500	X	1.850	X	1	4.625	SQ.M.
TOTAL						9.435	SQ.M.
TOTAL MUMTY AREA							
68.076-9.435						58.641	SQ.M.

WATER TANK AREA DETAIL							
M1	2.860	X	5.470	X	1	15.644	SQ.M.
M2	7.596	X	4.970	X	1	37.752	SQ.M.
M3	1/2 x (4.970 +4.280) x 3.174					14.680	SQ.M.
TOTAL						68.076	SQ.M.

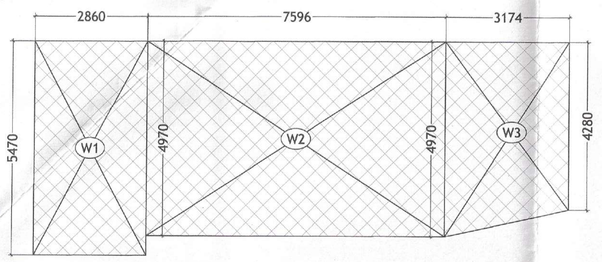

WATER TANK AREA DIAGRAM

BALCONY AREA CALCULATION ON ONE TYP. FLOOR							
BAL. I	2.950	X	1.200	X	3.000	10.620	SQ.M.
BAL. II	1.650	X	1.200	X	1.000	1.980	SQ.M.
BAL. II'	1.470	X	1.200	X	1.000	1.764	SQ.M.
BAL. IIA	1.470	X	1.200	X	1.000	1.764	SQ.M.
	0.080	X	0.210	X	3.000	0.050	SQ.M.
						1.814	
BAL.III	3.285	X	1.200	X	1.000	3.942	
BAL. IIIA	2.050	X	1.200	X	1.000	2.460	SQ.M.
	0.080	X	0.990	X	3.000	0.238	SQ.M.
						2.698	
BAL. IV	1.200	X	1.765	X	1.000	2.118	SQ.M.
TOTAL						29.448	SQ.M.

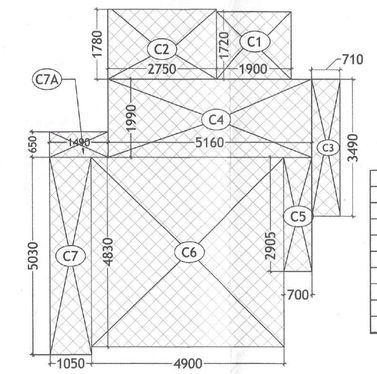

2 BHK (TYPE 6)
CARPET AREA DIAGRAM

CARPET AREA CALCULATION 2 BHK TYPE-06							
C1	1.900	X	1.720	X	1	3.268	SQ.M.
C2	2.750	X	1.780	X	1	4.895	SQ.M.
C3	0.710	X	3.490	X	1	2.478	SQ.M.
C4	5.160	X	1.990	X	1	10.268	SQ.M.
C5	0.700	X	2.905	X	1	2.034	SQ.M.
C6	4.900	X	4.830	X	1	23.667	SQ.M.
C7	1.050	X	5.030	X	1	5.282	SQ.M.
C7A	1.490	X	0.650	X	1	0.969	SQ.M.
TOTAL						52.860	SQ.M.

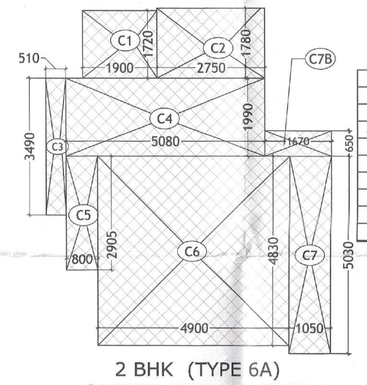

2 BHK (TYPE 6A)
CARPET AREA DIAGRAM

CARPET AREA CALCULATION 2 BHK TYPE -6A							
C1	1.900	X	1.720	X	1	3.268	SQ.M.
C2	2.750	X	1.780	X	1	4.895	SQ.M.
C3A	0.510	X	3.490	X	1	1.780	SQ.M.
C4A	5.080	X	1.990	X	1	10.109	SQ.M.
C5A	0.800	X	2.905	X	1	2.324	SQ.M.
C6	4.900	X	4.830	X	1	23.667	SQ.M.
C7	1.050	X	5.030	X	1	5.282	SQ.M.
C7B	1.670	X	0.650	X	1	1.086	SQ.M.
TOTAL						52.410	SQ.M.

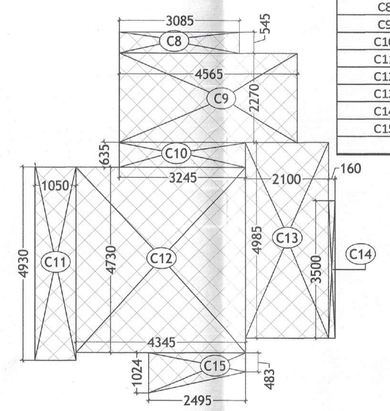

2 BHK (TYPE 7)
CARPET AREA DIAGRAM

CARPET AREA CALCULATION 2 BHK TYPE -7							
C8	3.085	X	0.545	X	1	1.681	SQ.M.
C9	4.565	X	2.270	X	1	10.363	SQ.M.
C10	3.245	X	0.635	X	1	2.061	SQ.M.
C11	1.050	X	4.930	X	1	5.177	SQ.M.
C12	4.345	X	4.730	X	1	20.552	SQ.M.
C13	2.100	X	4.985	X	1	10.469	SQ.M.
C14	0.160	X	3.500	X	1	0.560	SQ.M.
C15	1/2 X (0.483+1.024) X 2.495					1.880	SQ.M.
TOTAL						52.741	SQ.M.

RESIDENTIAL GROUND COVERAGE CALCULATION TOWER T-6

GROUND COVERAGE =RESIDENTIAL F.A.R OF GROUND FLOOR +G
= 89.215 +13.616 SQ.M
= 102.831 SQ.M

RESIDENTIAL BUILT UP AREA CALCULATION TOWER T-6

GROUND FLOOR BUILT UP AREA = F.A.R OF GROUND FLOOR
= 89.215 SQ.M .....(A)

FIRST FLOOR BUILT UP AREA = F.A.R OF FIRST FLOOR +(S1+S2)
=6.896 +12.4+12.35 = 31.646 SQ.M .....(B)

TYPICAL FLOOR BUILT UP AREA (2ND TO 9TH FLOOR) = F.A.R OF TYPICAL FLOOR + (S1+S2)
= 274.356 + 12.4+12.35 = 299.106 SQ.M .....(C)

TOTAL BUILT UP AREA = A +B+ (C X 8) + MUMTY AREA
= 89.215 +31.646+ (299.106 X 8) + 58.641
= 2572.350 SQ.M.

TOTAL F.A.R. AREA					
F.A.R. ON GROUND FLOOR	89.215	X	1	89.215	SQ.M.
F.A.R. ON 1ST FLOOR	6.896	X	1	6.896	SQ.M.
F.A.R. ON 2ND TO 9TH FLOOR	274.356	X	8	2194.848	SQ.M.
TOTAL				2290.959	SQ.M.

SUBMISSION DRAWING

CLIENT

M/S. SIGNATURE GLOBAL (INDIA) PRIVATE LIMITED
Signature Global, 1308 Dr. Gopal Das Building
28 Barakhamba Road C.P. New Delhi

PROJECT TITLE

PROPOSED REVISED BUILDING PLAN OF AFFORDABLE GROUP HOUSING COLONY FOR AN AREA MEASURING 5.444 ACRES (LICENCE NO. 89 OF 2019 DATED 02/08/2019 & LICENNCE NO 02 OF 2022 DATED 06.01.2022) IN SECTOR-89, GURUGRAM, MANESAR URBAN COMPLEX BEING DEVELOPED BY RAMPRASTHA SARE LAND HOLDING COMPANY ONE PVT. LTD. AND OTHERS IN COLLABORATION WITH SIGNATURE GLOBAL INDIA PVT. LTD.

MEP Consultant:
Consummate Engineering Services Pvt. Ltd.
B - 87, Sector 67, Noida,
Uttar Pradesh - 201301
Tel : +91- 0120 – 2303600
E-mail: mail@cespl.in

Structure Consultant:
NNC DESIGN INTERNATIONAL
G-70, 2nd floor, Jaswant Plaza, Main Sarita Vihar Road,
Okhla, New Delhi - 110025
Tel : +91-11-26940734/35/37 Fax: +91-11-26940738
E-mail: nnc_consultants@hotmail.com

R.K.& ASSOCIATES
Architects, Engineers & Planners
E-31, GREEN PARK MAIN, NEW DELHI - 110016, INDIA
Tel. : 26 96 - 3 1 5 8, 26 5 1 - 67 5 1, 26 5 9 - 7 3 5 7
Fax: (011) 2686-2640 E-mail : rka.architects@gmail.com

ARCHITECT'S SIGNATURE
ROHIT GARG
CA/94/17868

OWNER'S SIGNATURE

DRAWING TITLE (SUBMISSION DRAWING)
TOWER T6
(G+9)
AREAS

DRG. NO. 10

SCALE - 1:100 DATE - FEB 2023

This is a "PROVISIONAL BUILDING PLAN" only for the purpose of inviting objections from the general public

JD PA ATP(HQ)

Consultant Architect

ATP(HQ)

(Dinesh Kumar)
PA(HQ)

TO BE READ WITH THIS OFFICE MEMO NO.:
DATED :