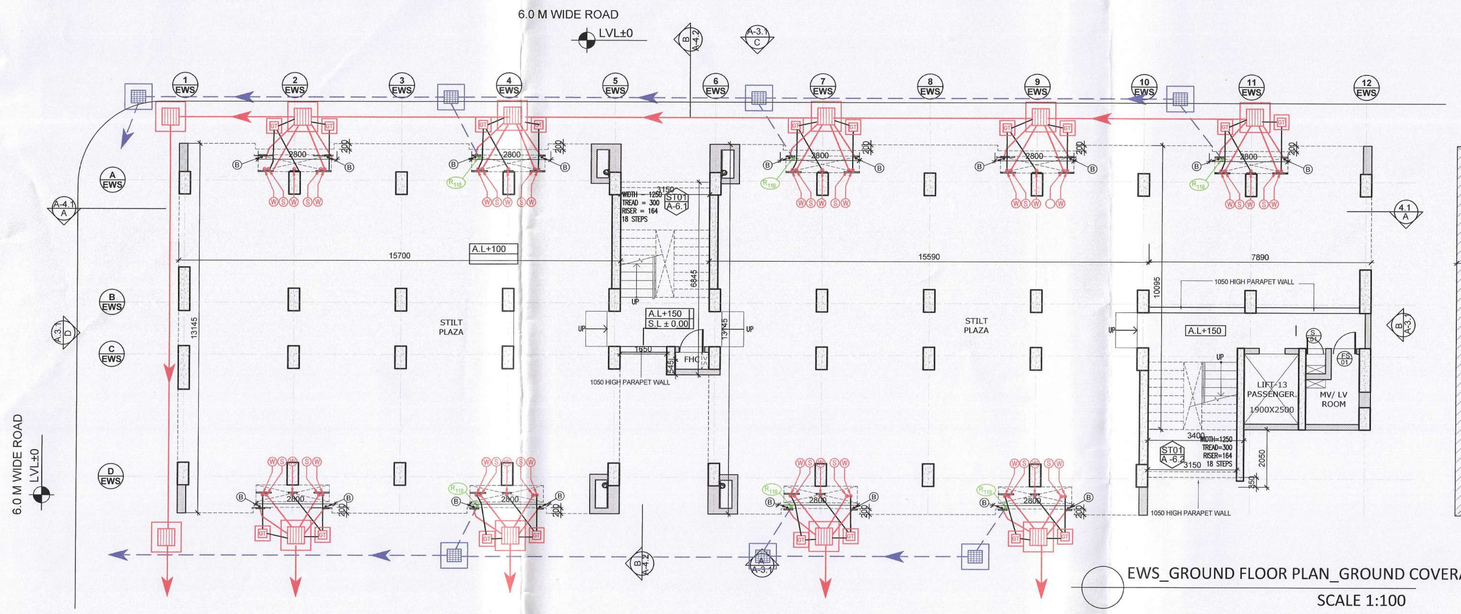

EWS_GROUND FLOOR PLAN_GROUND COVERAGE
SCALE 1:100

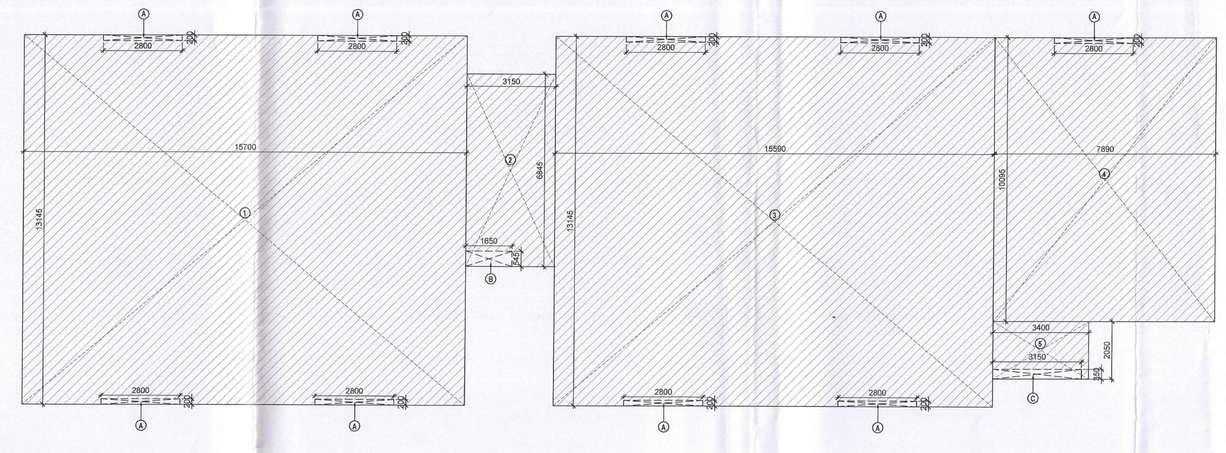

EWS_GROUND COVERAGE AREA DIAGRAM
SCALE 1:100

NOTES :-

- VRV System is being provided.
- Full DG power back up is being provided.
- Toilets are mechanical ventilated.
- All lifts shall have 100% power back-up.
- All electrical installations shall be as per provision of nbc.
- Fire-fighting/safety provisions will be as per relevant nbc provisions.
- Basement area shall have mechanically ventilated as per relevant code.
- All toilets are ventilated as per haryana building code 2017.
- Building has automatic sprinkler system wherever required by nbc.
- Building will be designed (structures) as per relevant i.s. codes for earthquake resistance.
- Solar panels of required capacity shall be provided on roof top as per hareda/zoning norms.
- All handicap ramps with railing.
- All fire fighting installations shall be as per provision of nbc.
- The rainwater harvesting system shall be provided as per central ground water auth.norms.

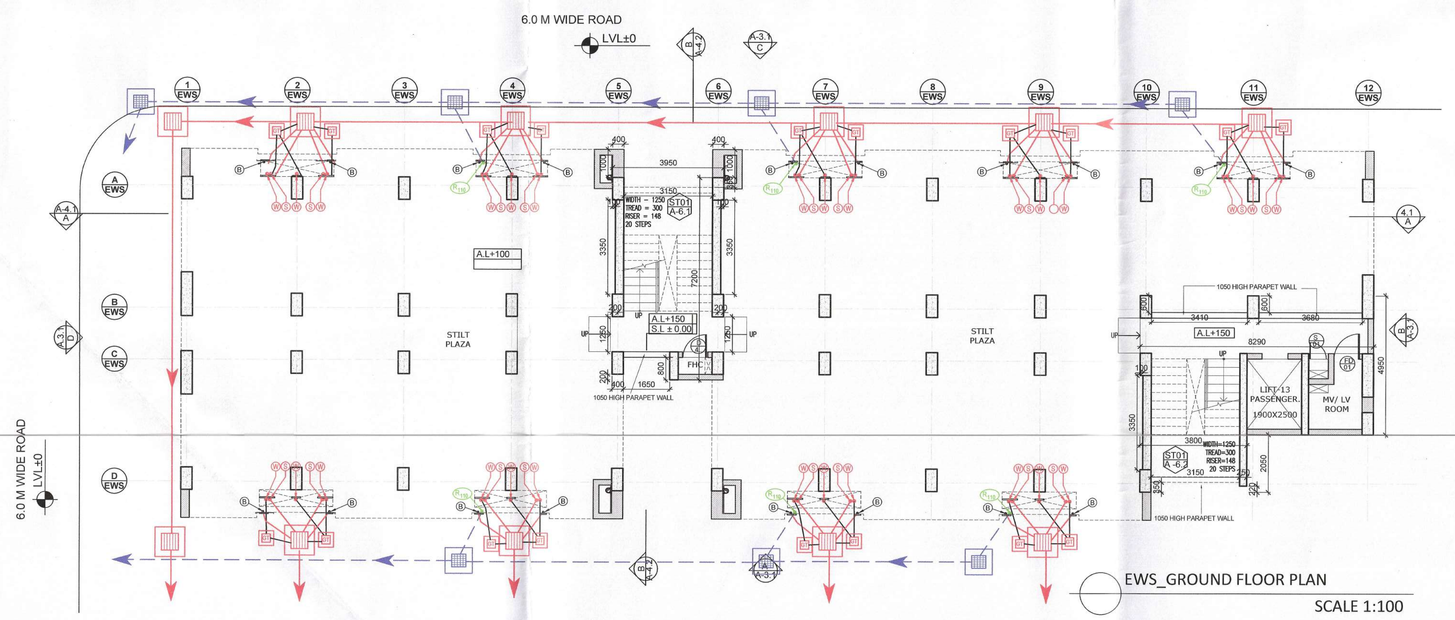

EWS_GROUND FLOOR PLAN
SCALE 1:100

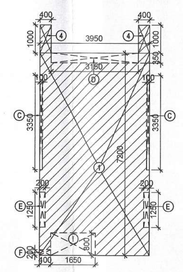

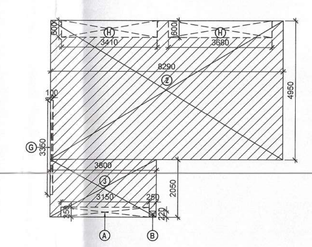

EWS_GROUND FLOOR AREA DIAGRAM
SCALE 1:100

TYPICAL FLOOR AREA CALCULATION				
S.NO.	LENGTH(M)	WIDTH(M)	NO.	AREA(SQ.M.)
COVERED AREA				
1	15.700	11.150	1	175.055
2	3.150	6.850	1	21.578
3	15.590	11.150	1	173.829
4	7.890	6.650	1	52.469
5	3.400	4.150	1	14.110
6	4.490	2.450	1	11.001
9	0.200	1.000	8	1.600
10	0.250	0.130	1	0.033
TOTAL ADDITIONS (A)				449.673
DEDUCTION				
A	3.150	3.950	2	24.885
B	1.200	0.600	1	0.720
C	1.900	1.600	1	3.040
C1	1.940	2.500	1	4.850
C2	0.700	0.700	1	0.490
C3	1.000	0.900	1	0.900
D	0.100	3.150	1	0.315
E	0.100	3.350	1	0.335
F	2.500	1.250	1	3.125
DEDUCTION (B)				38.660
F.A.R= COVERED AREA (A) - DEDUCTION (B)				411.013

GROUND COVERAGE AREA CALCULATION				
S.NO.	LENGTH(M)	WIDTH (M)	NO.	AREA(SQ. M.)
COVERED AREA				
1	15.700	13.145	1	206.377
2	3.150	6.845	1	21.562
3	15.590	13.145	1	204.931
4	7.890	10.095	1	79.650
5	3.400	2.050	1	6.970
TOTAL ADDITIONS (A)				519.488
DEDUCTION				
A	2.800	0.200	9	5.040
B	1.650	0.545	1	0.899
C	3.150	0.350	1	1.103
DEDUCTION (B)				7.042
F.A.R= COVERED AREA (A) - DEDUCTION (B)				512.447

GROUND FLOOR AREA CALCULATION				
S.NO.	LENGTH(M)	WIDTH (M)	NO.	AREA(SQ. M.)
COVERED AREA				
1	3.950	7.200	1	28.440
2	8.290	4.950	1	41.036
3	3.800	2.050	1	7.790
4	0.400	1.000	2	0.800
TOTAL ADDITIONS (A)				78.066
DEDUCTION				
A	3.150	0.350	1	1.103
B	0.250	0.220	1	0.055
C	0.100	3.350	2	0.670
D	3.150	0.350	1	1.103
E	0.200	1.250	2	0.500
F	0.400	0.200	1	0.080
G	0.100	3.350	1	0.335
H	3.410	0.600	2	4.092
I	1.650	0.800	1	1.320
DEDUCTION (B)				9.257
F.A.R= COVERED AREA (A) - DEDUCTION (B)				68.809

TYPICAL UNIT CARPET AREA CALCULATION				
S.NO.	LENGTH(M)	WIDTH(M)	NO.	AREA(SQ.M.)
COVERED AREA				
1	1.000	0.200	1	0.200
2	3.400	0.600	1	2.040
3	2.200	3.350	1	7.370
4	1.700	1.400	1	2.380
5	0.850	0.100	1	0.085
6	1.550	1.300	1	2.015
7	1.200	0.600	1	0.720
8	2.100	0.600	1	1.260
9	0.900	0.200	1	0.180
10	2.400	1.000	1	2.400
TOTAL ADDITIONS (A)				18.650
DEDUCTION				
DEDUCTION (B)				0.00
CARPET AREA= COVERED AREA (A) - DEDUCTION (B)				18.650

DOOR/ WINDOW	ROUGH OPENING	SILL	LINTEL
D01	1000X2150	-	2150
D02	850X2150	-	2150
D03	1000X2150	-	
D04	750X1850	300	2150
FD01	1100X2150	-	2150
DW01	2000X1100/2150	1050/-	2150
W01	1000X1100	1050	2150
W02	600X950	1200	2150

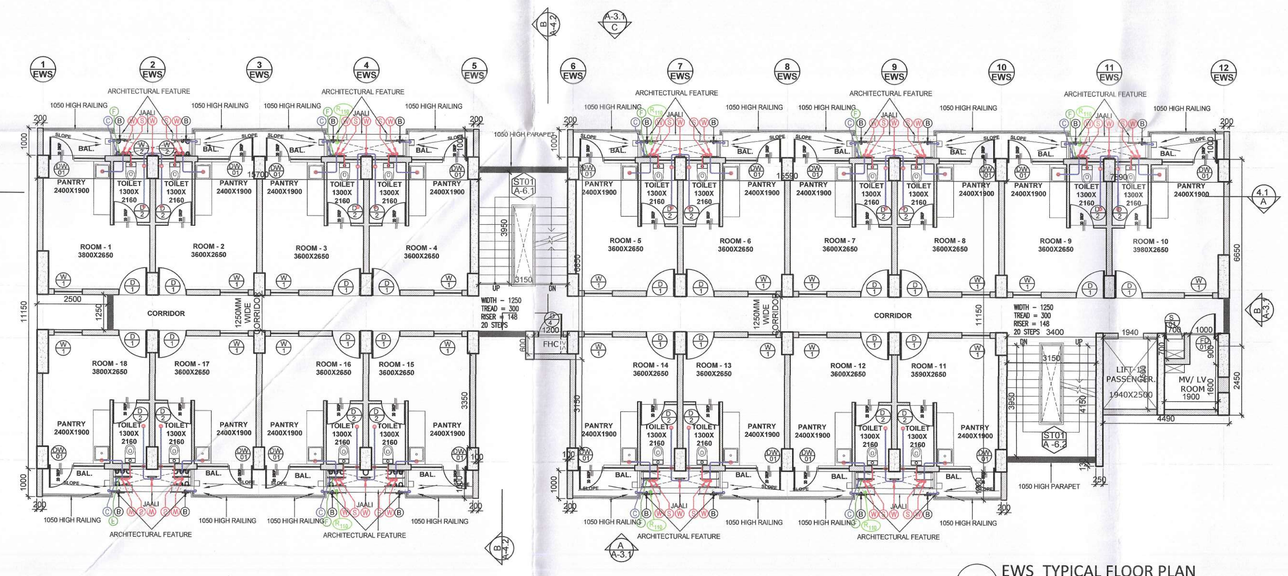

EWS_TYPICAL FLOOR PLAN
(1st-6th FLOOR) SCALE 1:100

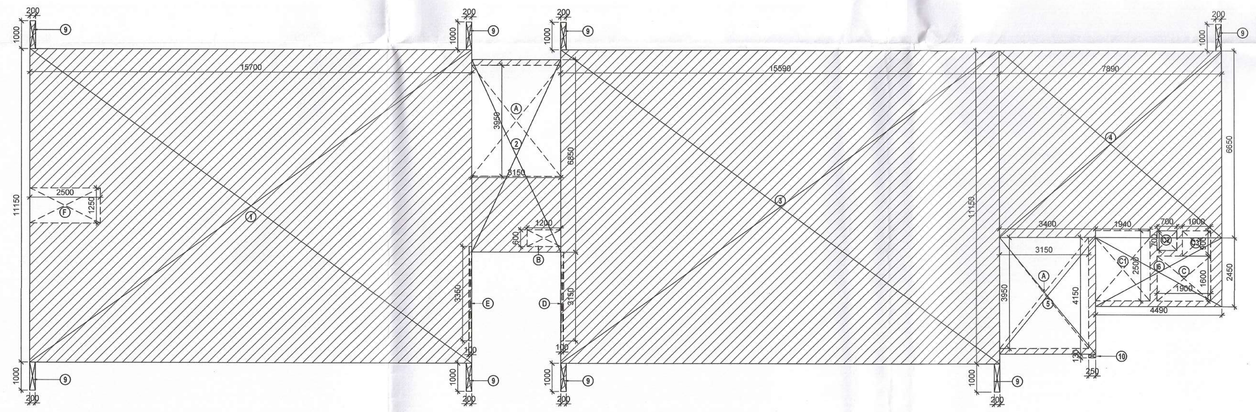

EWS_TYPICAL FLOOR AREA DIAGRAM
(1st-6th FLOOR) SCALE 1:100

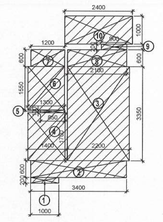

EWS_TYPICAL UNIT CARPET AREA- 18.65 SQM.

EWS_TYPICAL UNIT CARPET AREA DIAGRAM
(1st-7th FLOOR) SCALE 1:100

Checked and found ok for Public Health (Internal) Service only subject to comments in forwarding letter No. 103389 DW 24/4/24
Superintending Engineer (HQ) for Chief Engineer-I HSVP, Panchkula

SANCTIONED TO BE READ WITH THIS OFFICE MEMO NO.:
DATED :

S.T.P. (HQ) Member Secretary B.P.A.C.
S.T.P. (G) Member B.P.A.C.
S.T.P. (HR) Chairman B.P.A.C.
DTP (HQ)
ATP(HQ)
AD
PA
ATP
Varinder Kumar AD(HQ)
DDT (T) MEMBER BPAC

STRUCTURAL CONSULTANTS:
GOKANI CONSULTANTS

MEP CONSULTANTS:
CESPL PVT LTD.

DEVELOPER:
GODREJ PROPERTIES LTD

ARCHITECT:
ARCHITECTURE COLLECTIVE

REVISED BUILDING PLAN OF GROUP HOUSING COLONY OF AREA MEASURING 14.86225 ACRES (LICENSE NO.105 OF 2010 DT.03.12.2010 & 29 of 2024 DT. 21.02.2024) IN SECTOR-103, GURUGRAM BEING DEVELOPED BY GODREJ VESTAMARK LLP.

EWS
FLOOR PLANS AND AREA CALCULATION

NORTH

DRG.NO. M-EWS-2.0
ARCHITECT: GAURAV SANAN
SCALE : 1:100
DATE :
DEALT : VANSHIKA
CA Registration No. CA/99/25531
OWNER'S SIGN.
Godrej Vestamark LLP
Authorised Signatory
ARCHITECT'S SIGN.