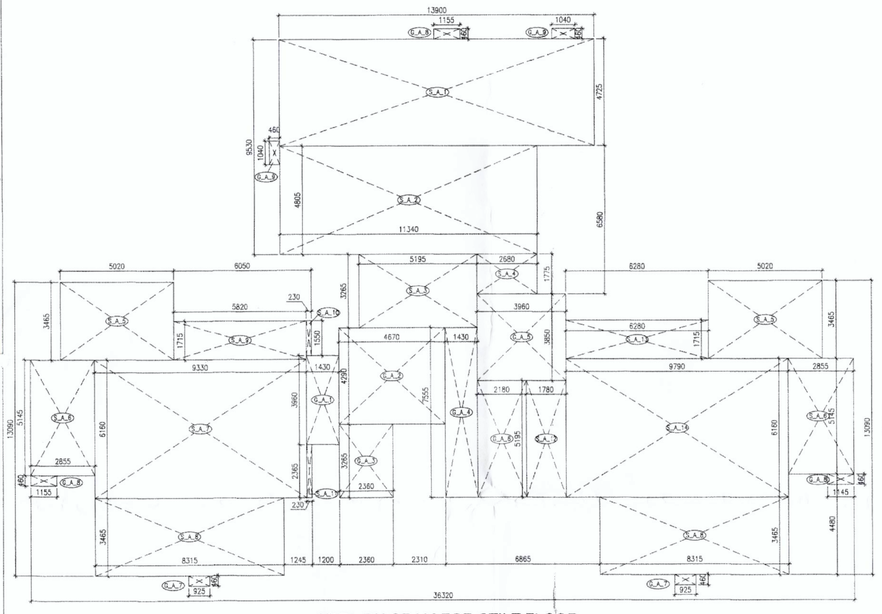

AREA DIAGRAM FOR STILT FLOOR

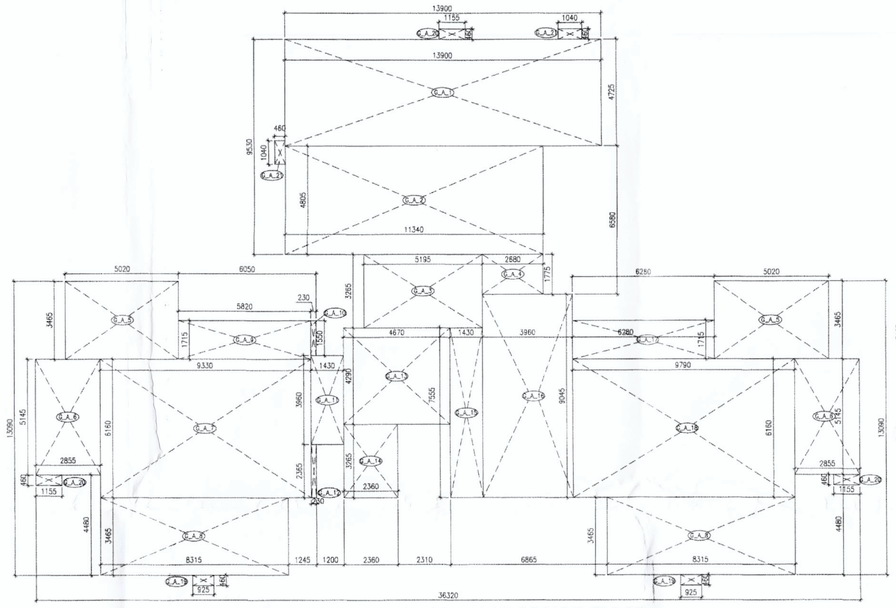

AREA DIAGRAM FOR GROUND FLOOR

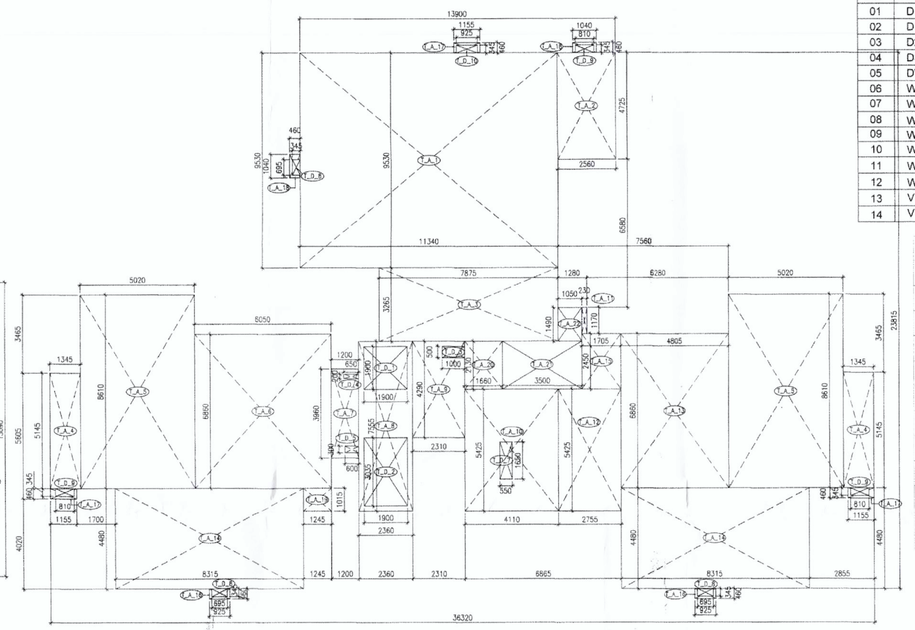

AREA DIAGRAM FOR TYPICAL FLOOR (1ST TO 19TH FLOOR)

DOOR / WINDOW SCHEDULE				
S.N	ITEM	SIZE	S. L.	L. L.
01	D	1200X2100	--	2100
02	D1	900X2100	--	2100
03	D2	750X2100	--	2100
04	D3	1250X2100	--	2100
05	DW	1020X1200	900	2100
06	W	1600X1600	900	2500
07	W1	1500X1900	600	2500
08	W2	1800X1900	600	2500
09	W3	1015X2200	600	2800
10	W4	1000X2400	100	2500
11	W5	1100X1900	600	2500
12	W6	1600X1900	600	2500
13	V	600X1900	600	2500
14	V1	450X900	1200	2100

FIRE LEGEND :-

- A ..... 1500 M.S FIRE WET RISER PIPE
- B ..... 1500 M.S SPRINKLER RISER PIPE
- C ..... 800 M.S SPRINKLER DRAIN PIPE
- FHC FIRE HOSE CABINET
- FLOW SWITCH
- PENDENT TYPE SPRINKLER
- SIDE WALL TYPE SPRINKLER
- SPRINKLER FEEDER LINE

IMPORTANT NOTES:-

(300 x 600)mm CUT OUT IN FHC.
1.) 1500 WET RISER.
2.) 1500 SPRINKLER RISER.
3.) 800 DRAIN PIPE.

PROJECT TITLE

Superimposed Building Plan for Part Completion of Grouphousing Colony Area Measuring 48.818 Acres (License no. 44 of 2009 dated 14/08/2009 & 68 of 2011 dated 21/07/2011) situated at revenue estate of village Wazirpur & Mewka, Sector-92, Gururam Manesar Urban Complex , Distt. Gurugram, Haryana

ARCHITECT

RAJIV KHANNA & ASSOCIATES(P). LTD.
727 Sec-15 (A), Gurgaon
TELE / FAX : 0124- 4035727
e-mail: socdemo@studiokrk.com

GENERAL NOTES:- ALL EXTERNAL WALL ARE 230 MM TH.

PLUMBING NOTES:-

1 NON-RAISED FLOOR TRAP (FT) 40 DIA uPVC PIPE.
2 KITCHEN SINK 75X75 DOR TRAP FLEXIBLE PIPE.
3 FLOOR DRAIN (FD 75) FLOOR TRAP (FT) 63 DIA uPVC WASTE PIPE.
4 110 DIA uPVC PIPE USED FOR SOIL & WASTE.
5 110 DIA uPVC PIPE USED FOR TERRACE RAIN WATER.
6 110 DIA uPVC PIPE USED FOR VENT & COW.

SCHEDULE OF PIPES :-

PIPE NO.	DESCRIPTION
1	110 DIA uPVC SOIL & VENT PIPE
2	110 DIA uPVC WASTE & VENT PIPE
3	75 DIA uPVC ANTI-SYPHONAGE PIPE
4	110 DIA uPVC TERRACE RAIN WATER PIPE
5	50 DIA uPVC BALCONY DRAIN WASTE PIPE
6	DOMESTIC WATER SUPPLY (CP) TAKE PIPE
7	FLUSHING WATER SUPPLY (CP) TAKE PIPE
8	DOMESTIC WATER SUPPLY RISER *
9	FLUSHING WATER SUPPLY RISER *
10	HOT WATER SUPPLY (CP) TAKE PIPE FROM 200 LIR PANEL
11	DOMESTIC WATER SUPPLY (CP) TAKE PIPE FOR TOP 4TH FLOOR
FT	FLOOR TRAP (FT) 40 DIA
FD	FLOOR DRAIN (FD) 40 DIA
BD	BALCONY DRAIN (FD) 40 DIA
B	BATH TUB TRAP
OC	OUTER DIA OF PIPE

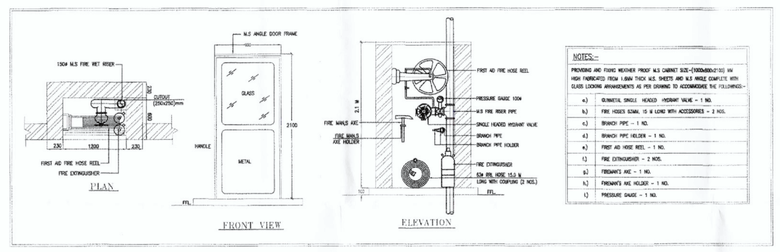

AREA STATEMENT FOR STILT FLOOR FAR AREA

S. No	Description	Type	Number	Dimension Length	Dimension Breadth	Calculation	Area	Unit
Addition								
1	G_A_1	Rectangle	1	1.430	3.960	Length X breadth	5.663	
2	G_A_2	Rectangle	1	4.670	4.290	Length X breadth	20.034	
3	G_A_3	Rectangle	1	2.360	3.265	Length X breadth	7.705	
4	G_A_4	Rectangle	1	1.430	7.555	Length X breadth	10.804	
5	G_A_5	Rectangle	1	3.960	3.850	Length X breadth	15.246	
6	G_A_6	Rectangle	1	2.180	5.195	Length X breadth	11.325	
7	G_A_7	Rectangle	2	0.925	0.460	Length X breadth	0.851	
8	G_A_8	Rectangle	3	1.155	0.460	Length X breadth	1.594	
9	G_A_9	Rectangle	2	0.460	1.040	Length X breadth	0.957	
						Total Addition area =	**74.179**	**SQM.**
						STILT FLOOR (FAR) = Addition area	**74.179**	**SQM.**

AREA STATEMENT FOR STILT FLOOR NON FAR AREA

S. No	Description	Type	Number	Dimension Length	Dimension Breadth	Calculation	Area	Unit
Addition								
1	S_A_1	Rectangle	1	13.900	4.725	Length X breadth	65.6775	
2	S_A_2	Rectangle	1	11.340	4.805	Length X breadth	54.4887	
3	S_A_3	Rectangle	1	5.195	3.265	Length X breadth	16.961675	
4	S_A_4	Rectangle	1	2.680	1.775	Length X breadth	4.757	
5	S_A_5	Rectangle	2	5.020	3.465	Length X breadth	34.789	
6	S_A_6	Rectangle	2	2.855	5.145	Length X breadth	29.378	
7	S_A_7	Rectangle	1	9.330	6.160	Length X breadth	57.473	
8	S_A_8	Rectangle	2	8.315	3.465	Length X breadth	57.623	
9	S_A_9	Rectangle	1	5.820	1.715	Length X breadth	9.981	
10	S_A_10	Rectangle	1	0.230	1.550	Length X breadth	0.357	
11	S_A_11	Rectangle	1	0.230	2.365	Length X breadth	0.544	
12	S_A_12	Rectangle	1	1.780	5.195	Length X breadth	9.247	
13	S_A_13	Rectangle	1	6.280	1.715	Length X breadth	10.770	
14	S_A_14	Rectangle	1	9.790	6.160	Length X breadth	60.306	
						Total Addition area =	**412.353**	**SQM.**
						STILT FLOOR (NON FAR) = Addition area	**412.353**	**SQM.**

AREA STATEMENT FOR GROUND COVERAGE

S. No	Description	Type	Number	Dimension Length	Dimension Breadth	Calculation	Area	Unit
Addition								
1	G_A_1	Rectangle	1	13.900	4.725	Length X breadth	65.678	
2	G_A_2	Rectangle	1	11.340	4.805	Length X breadth	54.489	
3	G_A_3	Rectangle	1	5.195	3.265	Length X breadth	16.962	
4	G_A_4	Rectangle	1	2.680	1.775	Length X breadth	4.757	
5	G_A_5	Rectangle	2	5.020	3.465	Length X breadth	34.789	
6	G_A_6	Rectangle	2	2.855	5.145	Length X breadth	29.378	
7	G_A_7	Rectangle	1	9.330	6.160	Length X breadth	57.473	
8	G_A_8	Rectangle	2	8.315	3.465	Length X breadth	57.623	
9	G_A_9	Rectangle	1	5.820	1.715	Length X breadth	9.981	
10	G_A_10	Rectangle	1	0.230	1.550	Length X breadth	0.357	
11	G_A_11	Rectangle	1	1.430	3.960	Length X breadth	5.663	
12	G_A_12	Rectangle	1	0.230	2.365	Length X breadth	0.544	
13	G_A_13	Rectangle	1	4.670	4.290	Length X breadth	20.034	
14	G_A_14	Rectangle	1	2.360	3.265	Length X breadth	7.705	
15	G_A_15	Rectangle	1	1.430	7.555	Length X breadth	10.804	
16	G_A_16	Rectangle	1	3.960	9.045	Length X breadth	35.818	
17	G_A_17	Rectangle	1	6.280	1.715	Length X breadth	10.770	
18	G_A_18	Rectangle	1	9.790	6.160	Length X breadth	60.306	
17	G_A_19	Rectangle	2	0.925	0.460	Length X breadth	0.851	
18	G_A_20	Rectangle	3	1.155	0.460	Length X breadth	1.594	
19	G_A_21	Rectangle	2	1.040	0.460	Length X breadth	0.957	
						GROUND COVERAGE=Addition area=	**486.532**	**SQM.**

TOTAL NO. OF TYPICAL FLOORS	19	
F.A.R TYPICAL FLOOR	473.621	SQM.
TOTAL F.A.R TYPICAL FLOORS (1ST. TO 19TH.)	8998.799	SQM.
F.A.R STILT FLOOR	74.179	SQM.
TOTAL F.A.R OF TOWER T5 =TOTAL FAR FOR TYPICAL + STILT FLOOR =	9072.978	SQM.
TOTAL F.A.R OF 13 TOWERS T5 =	117948.714	SQM.

AREA STATEMENT FOR TYPICAL FLOOR (FAR)

S. No	Description	Type	Number	Dimension Length	Dimension Breadth	Calculation	Area	Unit
Addition								
1	T_A_1	Rectangle	1	11.340	9.530	Length X breadth	108.070	
2	T_A_2	Rectangle	1	2.560	4.725	Length X breadth	12.096	
3	T_A_3	Rectangle	1	7.875	3.265	Length X breadth	25.712	
4	T_A_4	Rectangle	2	1.345	5.145	Length X breadth	13.840	
5	T_A_5	Rectangle	2	5.020	8.610	Length X breadth	86.444	
6	T_A_6	Rectangle	1	6.050	6.860	Length X breadth	41.503	
7	T_A_7	Rectangle	1	1.200	3.960	Length X breadth	4.752	
8	T_A_8	Rectangle	1	2.360	7.555	Length X breadth	17.830	
9	T_A_9	Rectangle	1	2.310	4.290	Length X breadth	9.910	
10	T_A_10	Rectangle	1	4.110	5.425	Length X breadth	22.297	
11	T_A_11	Rectangle	1	0.230	1.170	Length X breadth	0.269	
12	T_A_12	Rectangle	1	2.755	5.425	Length X breadth	14.946	
13	T_A_13	Rectangle	1	4.805	6.860	Length X breadth	32.962	
14	T_A_14	Rectangle	2	8.315	4.480	Length X breadth	74.502	
15	T_A_15	Rectangle	1	1.705	2.450	Length X breadth	4.177	
16	T_A_16	Rectangle	2	0.925	0.460	Length X breadth	0.851	
17	T_A_17	Rectangle	3	1.155	0.460	Length X breadth	1.594	
18	T_A_18	Rectangle	2	1.040	0.460	Length X breadth	0.957	
19	T_A_19	Rectangle	1	1.245	1.015	Length X breadth	1.264	
20	T_A_20	Rectangle	1	1.660	2.130	Length X breadth	3.536	
21	T_A_21	Rectangle	1	3.500	2.130	Length X breadth	7.455	
22	T_A_22	Rectangle	1	1.490	1.050	Length X breadth	1.564	
						Total Addition area =	**486.531**	**SQM.**
Deductions								
1	T_D_1	Rectangle	1	1.900	1.900	Length X breadth	3.610	
2	T_D_2	Rectangle	1	1.900	3.035	Length X breadth	5.767	
3	T_D_3	Rectangle	1	1.000	0.500	Length X breadth	0.500	
4	T_D_4	Rectangle	1	0.650	0.200	Length X breadth	0.130	
5	T_D_5	Rectangle	1	0.600	0.300	Length X breadth	0.180	
6	T_D_7	Rectangle	1	0.550	1.650	Length X breadth	0.908	
7	T_D_8	Rectangle	3	0.695	0.345	Length X breadth	0.719	
8	T_D_9	Rectangle	3	0.810	0.345	Length X breadth	0.838	
9	T_D_10	Rectangle	1	0.925	0.345	Length X breadth	0.258	
						Total Deduction area =	**12.91**	**SQM.**
						Typical floor area = Addition area - Deduction area	**473.621**	**SQM.**

AREA CALCULATION TOWER - T5 (Applicable for tower -10 only)

Description	No of Floors	No of Units per floor)	No of Buildings	FAR Total Sanctioned FAR Area (SQM)	FAR Total Achieved FAR Area (SQM)	GROUND COVERAGE Sanctioned Gr. Coverage (SQM)	GROUND COVERAGE Achieved Gr. Coverage (SQM)
Tower Details	19	3	1				
F.A.R. Typical Floor				473.621	473.621	486.532	486.532
Total F.A.R. Typical Floors				8998.799	8998.799		
F.A.R. Stilt Floor				74.179	74.179		
Total				**9072.978**	**9072.978**	**486.532**	**486.532**

DOOW WINDWS CHANGES CALCULATION

LEGEND	Nos.	Units	No of floos	TOTAL
DOOR	2	1	19	38.000
WINDOWS	3	1	19	57.000
TOTAL IN TOWER				**95.000**

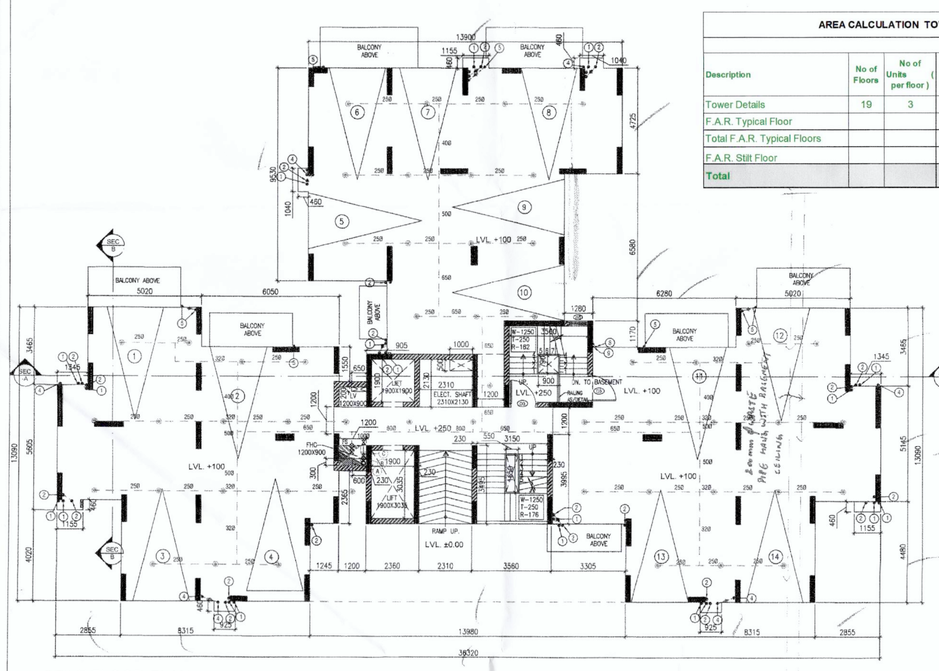

STILT FLOOR PLAN

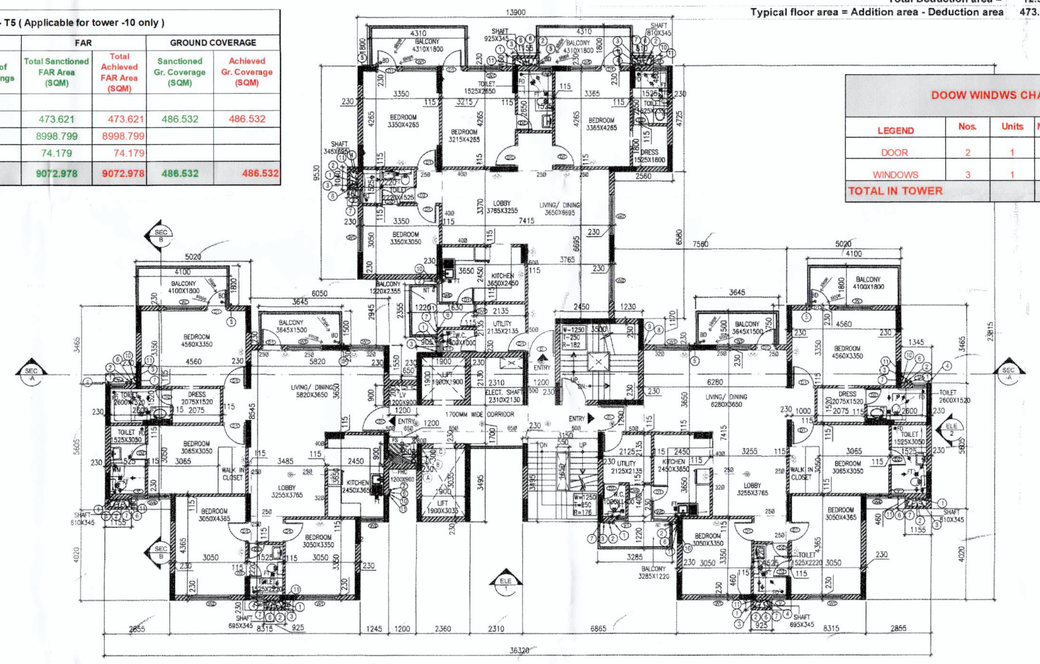

TYPICAL FLOOR PLAN (1ST FLOOR TO 19TH FLOOR)

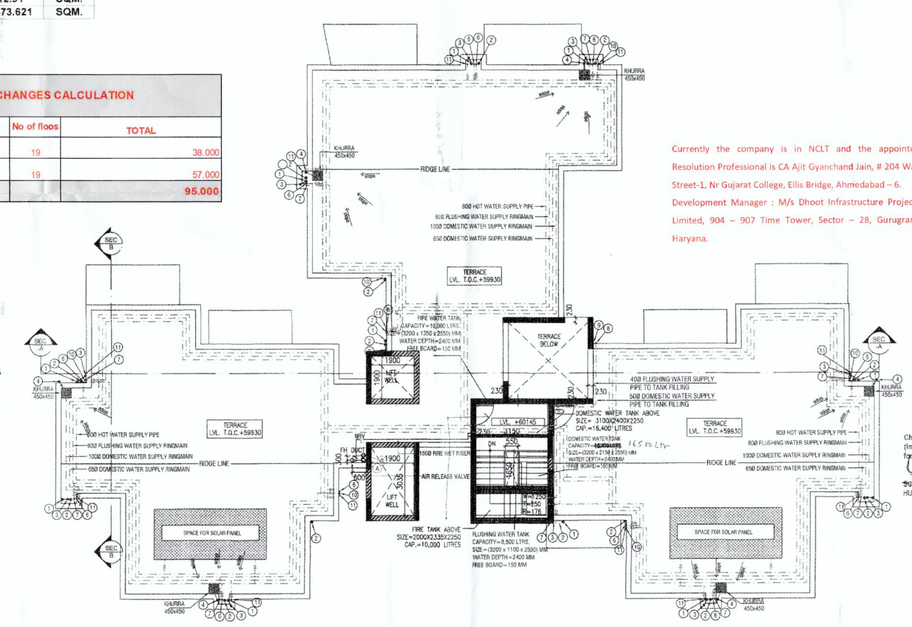

TERRACE PLAN

Currently the company is in NCLT and the appointed Resolution Professional is CA Ajit Gyanchand Jain, # 204 Wall Street-1, Nr Gujarat College, Ellis Bridge, Ahmedabad – 6. Development Manager : M/s Dhoot Infrastructure Projects Limited, 904 – 907 Time Tower, Sector – 28, Gurugram, Haryana.

KEY PLAN

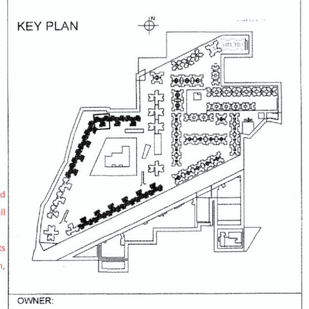

OWNER

M/S. SA INFRACON PVT. LTD.
C-10, C BLOCK MARKET,
VASANT VIHAR,
NEW DELHI

OWNER SIGNATURE

For S.A. Infracon Pvt. Ltd.
Authorised Signatory

ARCHITECT SIGNATURE

RAJIV KHANNA
Architect CA/2000/17

Checked and found ok for Public health (Internal) Services only subject to compliance in forwarding letter No. EE/HSVU/333 Dt. 07/2/2021

Architects
SUNAINA PUNIA
CA/2022/147929

Superintending Engineer, HSVU, Panchkula

SCALE - 1:100

DRAWING TITLE

SUBMISSION DRAWING
TOWER-T5 (Applicable for Tower-10 Only)
PLANS & AREA DIAGRAMS

DRAWING NO.

SB_TT5_A_100