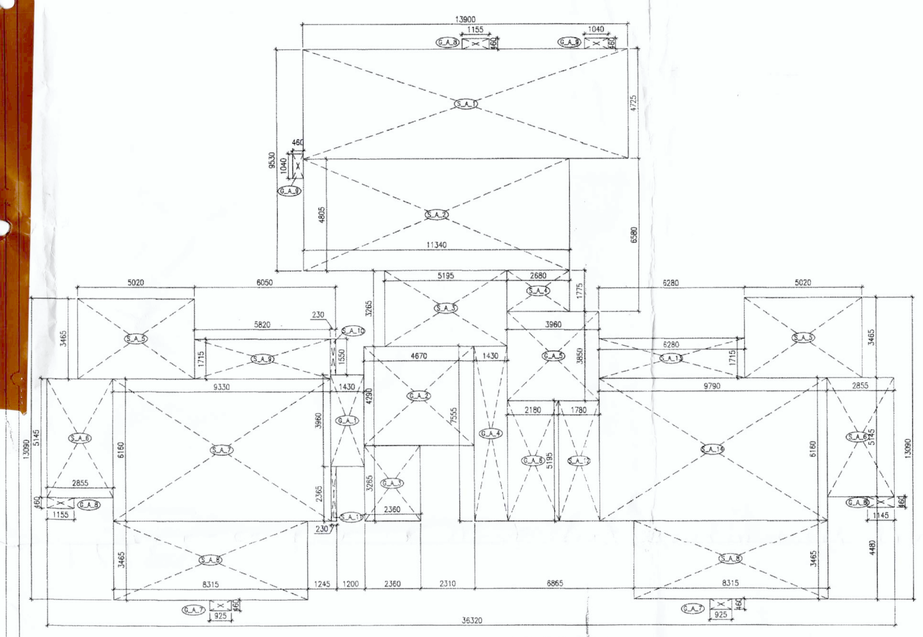

AREA DIAGRAM FOR STILT FLOOR

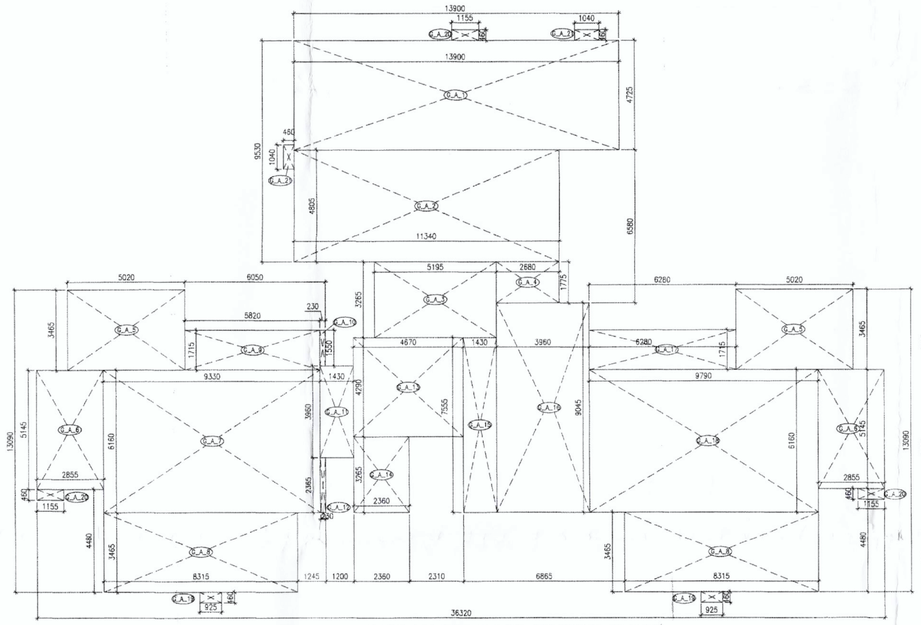

AREA DIAGRAM FOR GROUND FLOOR

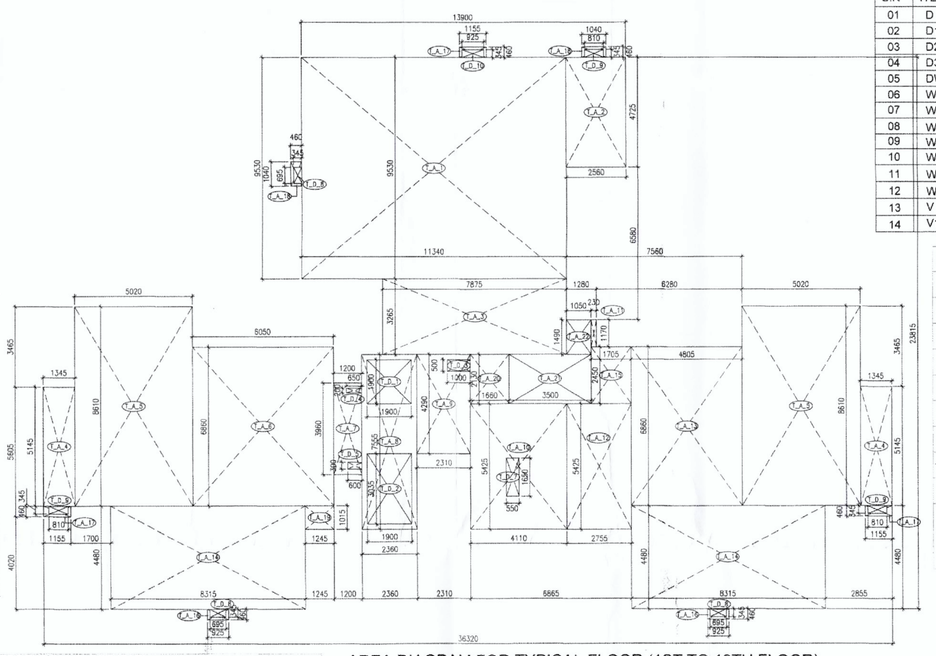

AREA DIAGRAM FOR TYPICAL FLOOR (1ST TO 19TH FLOOR)

DOOR / WINDOW SCHEDULE				
S.N	ITEM	SIZE	S. L	L L
01	D	1200X2100	--	2100
02	D1	900X2100	--	2100
03	D2	750X2100	--	2100
04	D3	1250X2100	--	2100
05	DW	1020X1200	900	2100
06	W	1600X1600	900	2500
07	W1	1500X1900	600	2500
08	W2	1800X1900	600	2500
09	W3	1015X2200	600	2800
10	W4	1000X2400	100	2500
11	W5	1100X1900	600	2500
12	W6	1600X1900	600	2500
13	V	600X1900	600	2500
14	V1	450X900	1200	2100

FIRE LEGEND :-

- A ..... 1500 M.S FIRE WET RISER PIPE
- B ..... 1500 M.S SPRINKLER RISER PIPE
- C ..... 800 M.S SPRINKLER DRAIN PIPE
- FHC FIRE HOSE CABINET
- FLOW SWITCH
- PENDENT TYPE SPRINKLER
- SIDE WALL TYPE SPRINKLER
- SPRINKLER FEEDER LINE

IMPORTANT NOTES:-

(300 x 600)mm CUT OUT IN FHC.
1.) 1500 WET RISER.
2.) 1500 SPRINKLER RISER.
3.) 800 DRAIN PIPE.

PROJECT TITLE

Superimposed Building Plan for Part Completion of Grouphousing Colony Area Measuring 48.818 Acres (License no. 44 of 2009 dated 14/08/2009 & 68 of 2011 dated 21/07/2011) situated at revenue estate of village Wazirpur & Mewka, Sector-92, Gurugram Manesar Urban Complex , Distt. Gurugram, Haryana

AD BD PA ATP

ARCHITECT

RAJIV KHANNA & ASSOCIATES(P). LTD.
22 Sec-15 (A), Gurgaon
TELE / FAX : 0124-4035127
e-mail: admin@studiokia.com

GENERAL NOTES:- ALL EXTERNAL WALL ARE 230 MM TH.

PLUMBING NOTES:-

1. WASH BASIN TO FLOOR TRAP (FT) 40 OD uPVC PIPE.
2. KITCHEN SINK TO FLOOR TRAP (SJBM) PIPE.
3. FLOOR DRAIN (FD) TO FLOOR TRAP (FT) 63 OD uPVC WASTE PIPE.
4. 110 OD uPVC PIPE USED FOR SOIL & WASTE.
5. 110 OD uPVC PIPE USED FOR SANITARY PARK WATER.
6. 90 OD uPVC PIPE USED FOR BALCONY.

SCHEDULE OF PIPES :-

PIPE NO.	DESCRIPTION
1	110 OD uPVC SOIL & WAST PIPE
2	110 OD uPVC WASTE & VENT PIPE
3	75 OD uPVC WATER DISTRIBUTION PIPE
4	110 OD uPVC TERRACE RAIN WATER PIPE
5	90 OD uPVC BALCONY RAIN WATER PIPE
6	DOMESTIC WATER SUPPLY 32N TWIN PIPE
7	FLUSHING WATER SUPPLY 32N TWIN PIPE
8	DOMESTIC WATER SUPPLY RISER *
9	FLUSHING WATER SUPPLY RISER *
10	HOT WATER SUPPLY 32N TWIN PIPE FROM SOLAR PANEL
11	DOMESTIC WATER SUPPLY 32N TWIN PIPE FOR STP ETP FLOOR
FT	FLOOR TRAP (110x110) MM
FD	FLOOR DRAIN (110x63) MM
BD	BALCONY DRAIN (110x63) MM
ST	BATH TUB TRAP
CI	CUTTER DIA OF PIPE

KEY PLAN

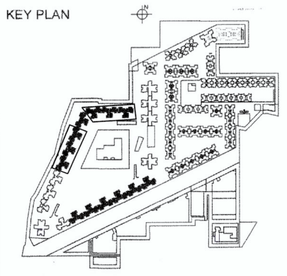

OWNER:

M/S. SA INFRACON PVT. LTD.
C-10, C BLOCK MARKET,
VASANT VIHAR,
NEW DELHI

For S.A. Infracon Pvt. Ltd.
Authorised Signatory

OWNER SIGNATURE

For S. A. Infracon Pvt. Ltd.
Authorised Signatory

ARCHITECT SIGNATURE

RAJIV KHANNA
Architect
Regd. No. 1038
SUNAINA PURIA
CA/2022/147829

Checked and found ok for Public Health (Internal) Services only subject to comments in forwarding letter No. EE(HZ)-3.5.5 Dt. 23/3/2021

Executive Engineer PHE
HUDA Panipat

SCALE - 1:100

DRAWING TITLE

SUBMISSION DRAWING (BLOCK - T5)
TOWER-T5 (Applicable for 5 nos tower Namly as Tower 6,7,8 , 11 &12)
PLANS & AREA DIAGRAMS

DRAWING NO.

SB_TT5_A_100

AREA STATEMENT FOR STILT FLOOR FAR AREA									
				Dimension					
S. No	Description	Type	Number	Length	Breadth	Calculation	Area	Unit	
Addition									
1	G_A_1	Rectangle	1	1.430	3.960	Length X breadth	5.663		
2	G_A_2	Rectangle	1	4.670	4.290	Length X breadth	20.034		
3	G_A_3	Rectangle	1	2.360	3.265	Length X breadth	7.705		
4	G_A_4	Rectangle	1	1.430	7.555	Length X breadth	10.804		
5	G_A_5	Rectangle	1	3.950	3.850	Length X breadth	15.246		
6	G_A_6	Rectangle	1	2.180	5.195	Length X breadth	11.325		
7	G_A_7	Rectangle	2	0.925	0.460	Length X breadth	0.851		
8	G_A_8	Rectangle	3	1.155	0.460	Length X breadth	1.594		
9	G_A_9	Rectangle	2	0.460	1.040	Length X breadth	0.957		
						Total Addition area =	74.179	SQM.	
						STILT FLOOR (FAR) + Addition area	74.179	SQM.	

AREA STATEMENT FOR STILT FLOOR NON FAR AREA									
				Dimension					
S. No	Description	Type	Number	Length	Breadth	Calculation	Area	Unit	
Addition									
1	S_A_1	Rectangle	1	13.900	4.725	Length X breadth	65.6775		
2	S_A_2	Rectangle	1	11.340	4.805	Length X breadth	54.4887		
3	S_A_3	Rectangle	1	5.195	3.265	Length X breadth	16.961675		
4	S_A_4	Rectangle	1	2.680	1.775	Length X breadth	4.757		
5	S_A_5	Rectangle	2	5.020	3.465	Length X breadth	34.789		
6	S_A_6	Rectangle	2	2.855	5.145	Length X breadth	29.378		
7	S_A_7	Rectangle	1	9.330	6.160	Length X breadth	57.473		
8	S_A_8	Rectangle	2	8.315	3.465	Length X breadth	57.623		
9	S_A_9	Rectangle	1	5.820	1.715	Length X breadth	9.981		
10	S_A_10	Rectangle	1	0.230	1.550	Length X breadth	0.357		
11	S_A_11	Rectangle	1	0.230	2.365	Length X breadth	0.544		
12	S_A_12	Rectangle	1	1.780	5.195	Length X breadth	9.247		
13	S_A_13	Rectangle	1	6.280	1.715	Length X breadth	10.770		
14	S_A_14	Rectangle	1	9.790	6.160	Length X breadth	60.306		
						Total Addition area =	412.353	SQM.	
						STILT FLOOR (NON FAR) + Addition area	412.353	SQM.	

AREA STATEMENT FOR GROUND COVERAGE								
				Dimension				
S. No	Description	Type	Number	Length	Breadth	Calculation	Area	Unit
Addition								
1	G_A_1	Rectangle	1	13.900	4.725	Length X breadth	65.678	
2	G_A_2	Rectangle	1	11.340	4.805	Length X breadth	54.489	
3	G_A_3	Rectangle	1	5.195	3.265	Length X breadth	16.962	
4	G_A_4	Rectangle	1	2.680	1.775	Length X breadth	4.757	
5	G_A_5	Rectangle	2	5.020	3.465	Length X breadth	34.789	
6	G_A_6	Rectangle	2	2.855	5.145	Length X breadth	29.378	
7	G_A_7	Rectangle	1	9.330	6.160	Length X breadth	57.473	
8	G_A_8	Rectangle	2	8.315	3.465	Length X breadth	57.623	
9	G_A_9	Rectangle	1	5.820	1.715	Length X breadth	9.981	
10	G_A_10	Rectangle	1	0.230	1.550	Length X breadth	0.357	
11	G_A_11	Rectangle	1	1.430	3.960	Length X breadth	5.663	
12	G_A_12	Rectangle	1	0.230	2.365	Length X breadth	0.544	
13	G_A_13	Rectangle	1	4.670	4.290	Length X breadth	20.034	
14	G_A_14	Rectangle	1	2.360	3.265	Length X breadth	7.705	
15	G_A_15	Rectangle	1	1.430	7.555	Length X breadth	10.804	
16	G_A_16	Rectangle	1	3.950	9.045	Length X breadth	35.818	
17	G_A_17	Rectangle	1	5.280	1.715	Length X breadth	10.770	
18	G_A_18	Rectangle	1	9.790	6.160	Length X breadth	60.306	
17	G_A_19	Rectangle	2	0.925	0.460	Length X breadth	0.851	
18	G_A_20	Rectangle	3	1.155	0.460	Length X breadth	1.594	
19	G_A_21	Rectangle	2	1.040	0.460	Length X breadth	0.957	
						GROUND COVERAGE=Addition area=	486.532	SQM.

TOTAL NO. OF TYPICAL FLOORS	19	
F.A.R TYPICAL FLOOR	473.621	SQM.
TOTAL F.A.R TYPICAL FLOORS (1ST. TO 19TH.)	8998.799	SQM.
F.A.R STILT FLOOR	74.179	SQM.
TOTAL F.A.R OF TOWER T5 =TOTAL FAR FOR TYPICAL + STILT FLOOR =	9072.978	SQM.
TOTAL F.A.R OF 13 TOWERS T5 =	117948.714	SQM.

AREA STATEMENT FOR TYPICAL FLOOR (FAR)								
				Dimension				
S. No	Description	Type	Number	Length	Breadth	Calculation	Area	Unit
Addition								
1	T_A_1	Rectangle	1	11.340	9.530	Length X breadth	108.070	
2	T_A_2	Rectangle	1	2.560	4.725	Length X breadth	12.096	
3	T_A_3	Rectangle	1	7.875	3.265	Length X breadth	25.712	
4	T_A_4	Rectangle	2	1.345	5.145	Length X breadth	13.840	
5	T_A_5	Rectangle	2	5.020	8.610	Length X breadth	86.444	
6	T_A_6	Rectangle	1	6.050	6.860	Length X breadth	41.503	
7	T_A_7	Rectangle	1	1.200	3.960	Length X breadth	4.752	
8	T_A_8	Rectangle	1	2.360	7.555	Length X breadth	17.830	
9	T_A_9	Rectangle	1	2.310	4.290	Length X breadth	9.910	
10	T_A_10	Rectangle	1	4.110	5.425	Length X breadth	22.297	
11	T_A_11	Rectangle	1	0.230	1.170	Length X breadth	0.269	
12	T_A_12	Rectangle	1	2.755	5.425	Length X breadth	14.946	
13	T_A_13	Rectangle	1	4.805	6.860	Length X breadth	32.962	
14	T_A_14	Rectangle	2	8.315	4.480	Length X breadth	74.502	
15	T_A_15	Rectangle	1	1.705	2.450	Length X breadth	4.177	
16	T_A_16	Rectangle	2	0.925	0.460	Length X breadth	0.851	
17	T_A_17	Rectangle	3	1.155	0.460	Length X breadth	1.594	
18	T_A_18	Rectangle	2	1.040	0.460	Length X breadth	0.957	
19	T_A_19	Rectangle	1	1.245	1.015	Length X breadth	1.264	
20	T_A_20	Rectangle	1	1.660	2.130	Length X breadth	3.536	
21	T_A_21	Rectangle	1	3.500	2.130	Length X breadth	7.455	
22	T_A_22	Rectangle	1	1.490	1.050	Length X breadth	1.564	
						Total Addition area =	486.531	SQM.
Deductions								
1	T_D_1	Rectangle	1	1.900	1.900	Length X breadth	3.610	
2	T_D_2	Rectangle	1	1.900	3.035	Length X breadth	5.767	
3	T_D_3	Rectangle	1	1.000	0.500	Length X breadth	0.500	
4	T_D_4	Rectangle	1	0.650	0.200	Length X breadth	0.130	
5	T_D_5	Rectangle	1	0.600	0.300	Length X breadth	0.180	
6	T_D_7	Rectangle	1	0.550	1.650	Length X breadth	0.908	
7	T_D_8	Rectangle	3	0.695	0.345	Length X breadth	0.719	
8	T_D_9	Rectangle	3	0.810	0.345	Length X breadth	0.838	
9	T_D_10	Rectangle	1	0.925	0.345	Length X breadth	0.258	
						Total Deduction area =	12.91	SQM.
						Typical floor area = Addition area - Deduction area	473.621	SQM.

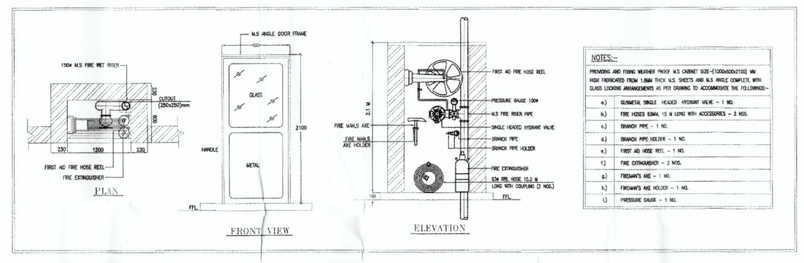

T- 5 DOOW WINDWS CHANGES CALCULATION				
LEGEND	Nos.	Units	No of floos	TOTAL
DOOR	2	1	19	38.000
WINDOWS	3	1	19	57.000
TOTAL IN TOWER				95.000

AREA CALCULATION TOWER - T5							
	FAR					GROUND COVERAGE	
Buildings	No of Floors	Total Sanctioned No of Buildings	No of Buildings	Total Sanctioned FAR Area (SQM)	Total Achieved FAR Area (SQM)	Sanctioned Gr. Coverage (SQM)	Achieved Gr. Coverage (SQM)
Total no of Typical Floors	19	13	6				
F.A.R. Typical Floor				473.621	473.621	486.532	486.532
Total F.A.R. Typical Floor				8998.799	8998.799		
F.A.R. Stilt Floor				74.179	74.179		
Total F.A.R. of Tower T5				9072.978	9072.978		
Total F.A.R. of 6 Towers				54437.868	54437.868		

Currently the company is in NCLT and the appointed Resolution Professional is CA Ajit Gyanchand Jain, # 204 Wall Street-1, Nr Gujarat College, Ellis Bridge, Ahmedabad – 6. Development Manager : M/s Dhoot Infrastructure Projects Limited, 904 – 907 Time Tower, Sector – 28, Gurugram, Haryana.

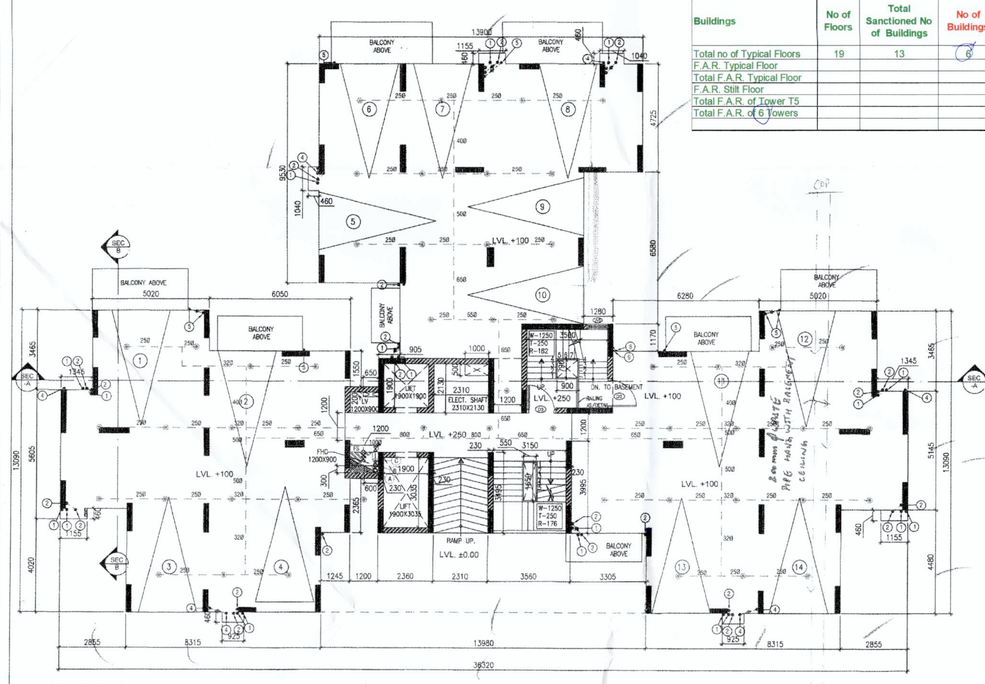

STILT FLOOR PLAN

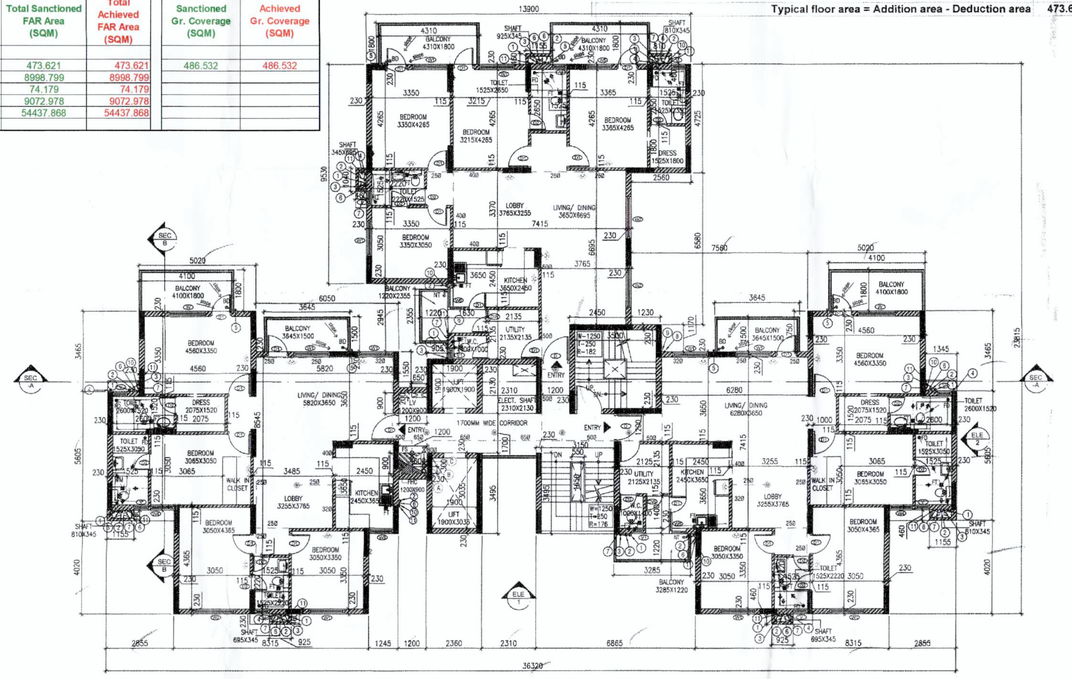

TYPICAL FLOOR PLAN (1ST FLOOR TO 19TH FLOOR)

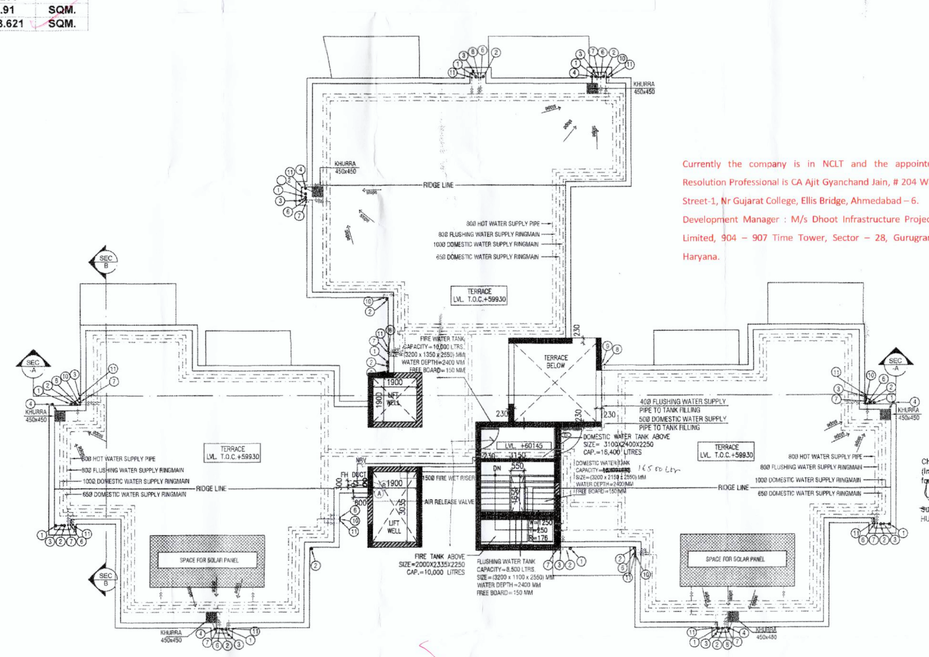

TERRACE PLAN