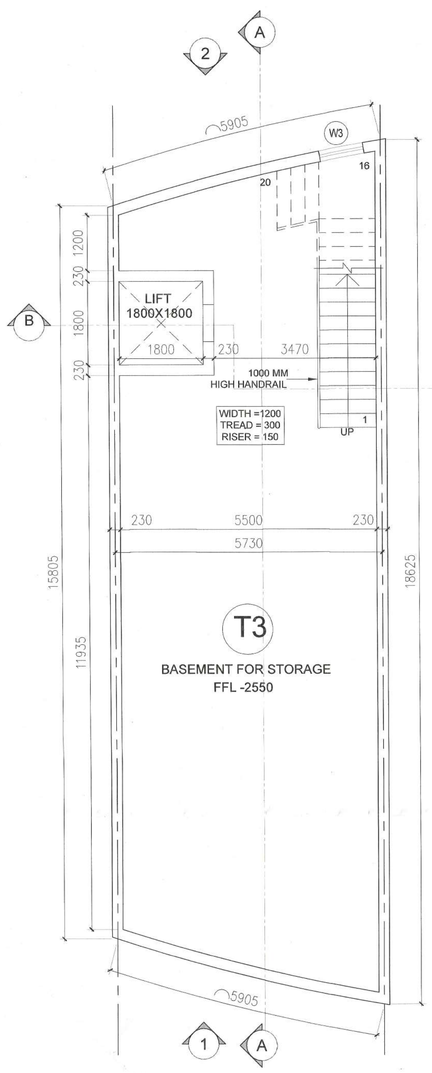

BASEMENT PLAN

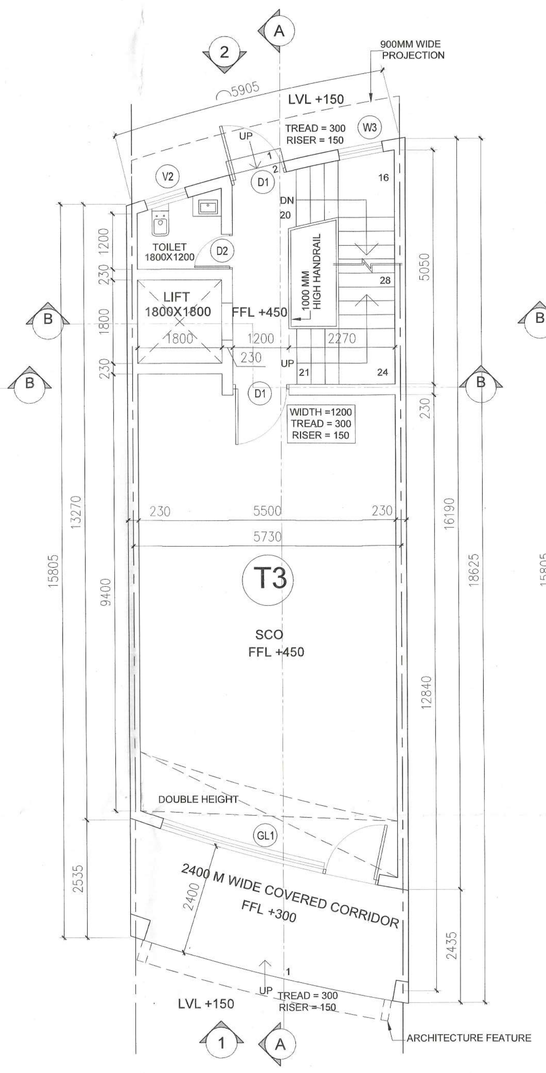

GROUND FLOOR PLAN

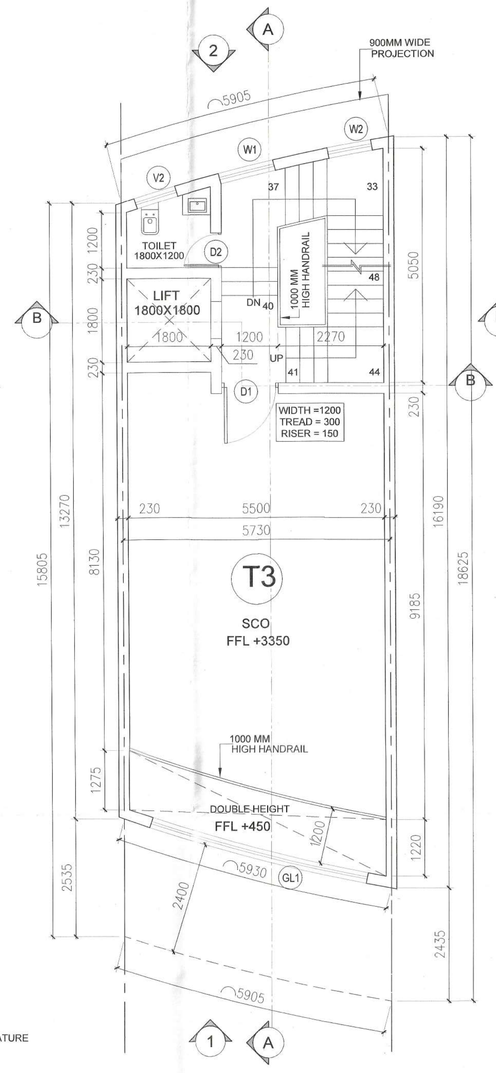

FIRST FLOOR PLAN

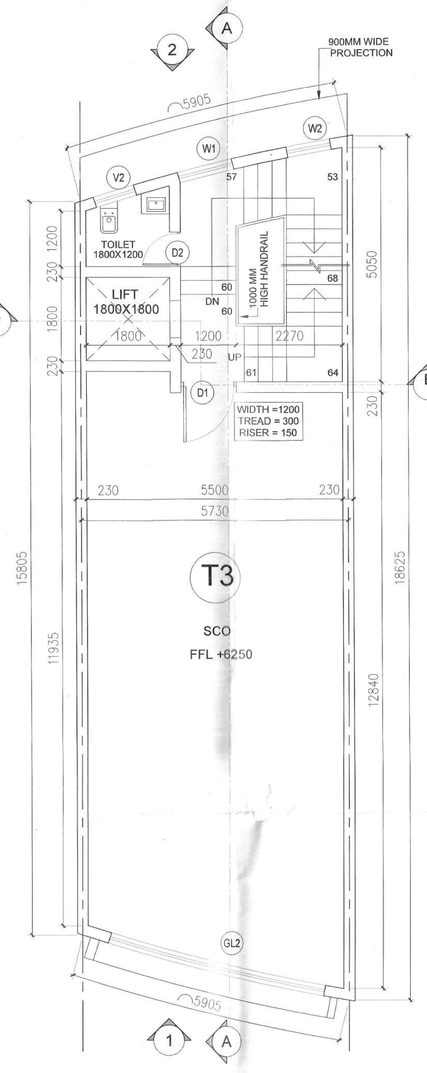

SECOND FLOOR PLAN

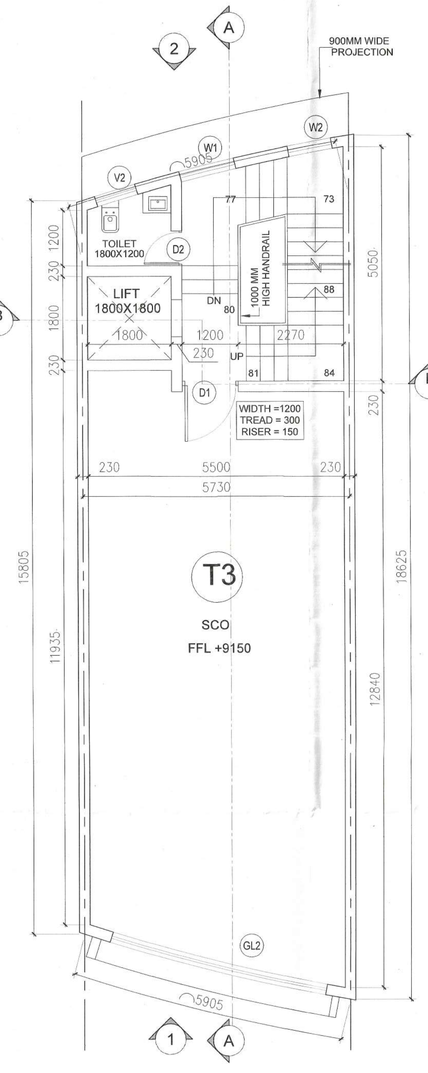

THIRD FLOOR PLAN

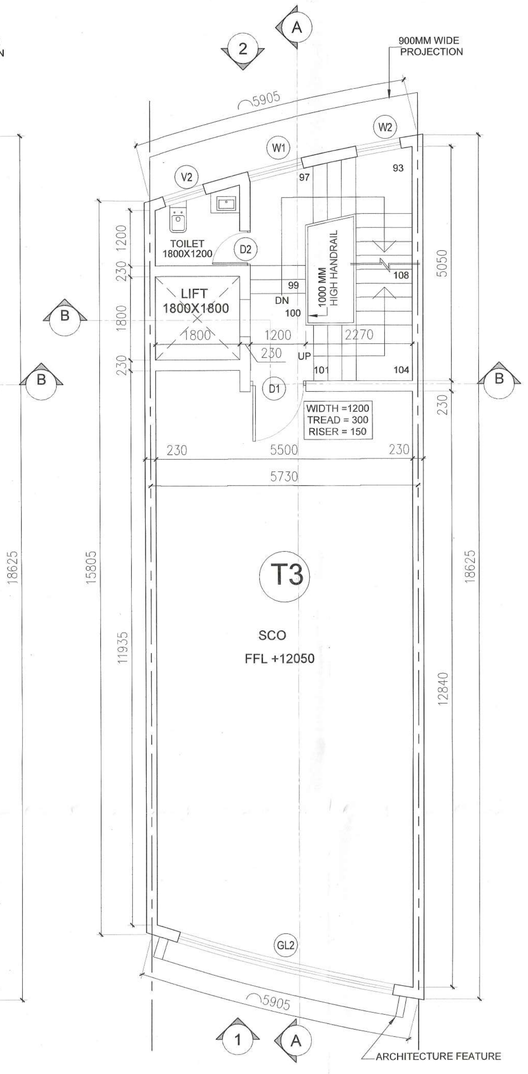

FOURTH FLOOR PLAN

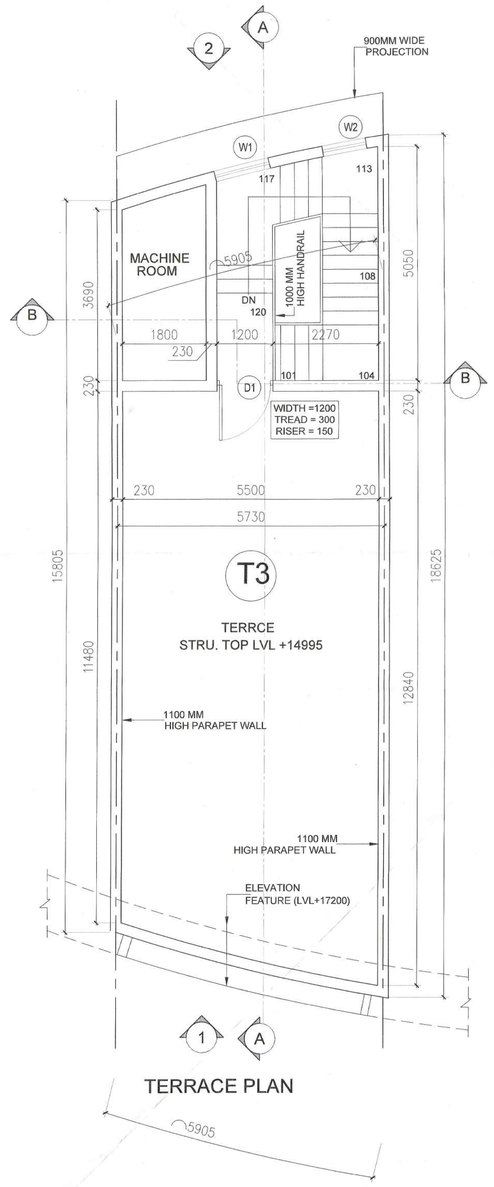

TERRACE PLAN

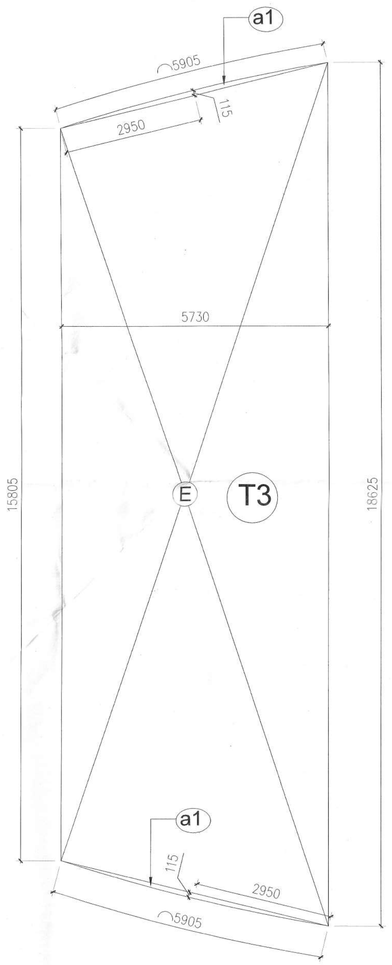

BASEMENT AREA DIAGRAM
(FREE OF FAR)

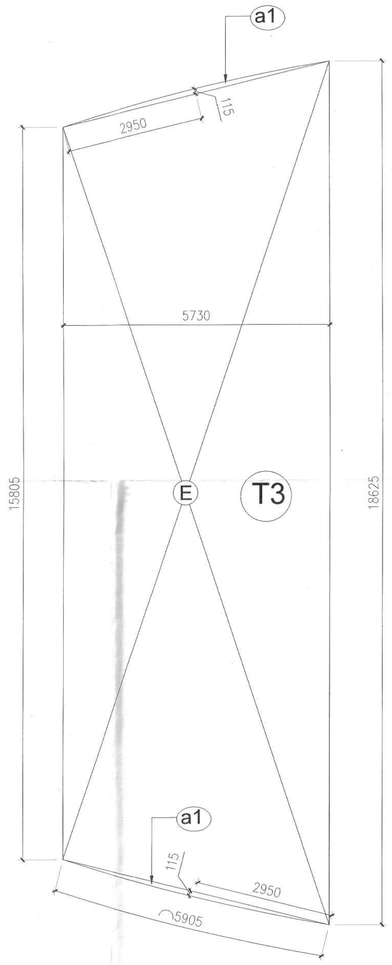

GROUND FLOOR AREA DIAGRAM

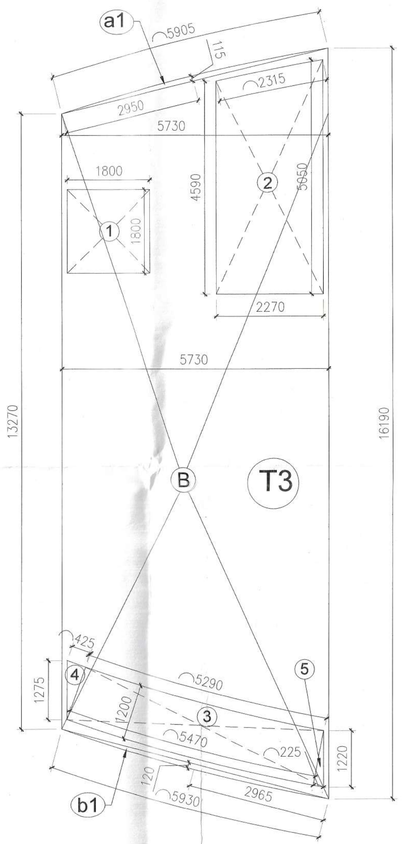

FIRST FLOOR AREA DIAGRAM

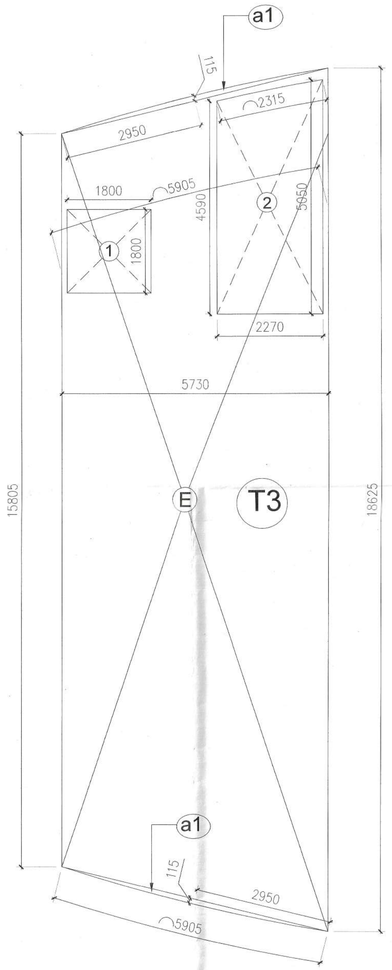

2nd, 3rd & 4th FLOOR AREA DIAGRAM

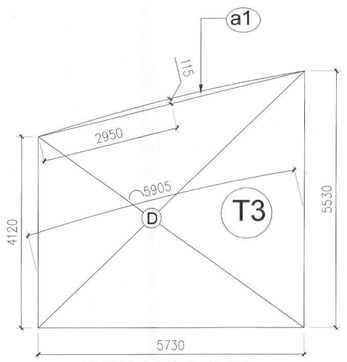

MUMTY AREA DIAGRAM
(FREE OF FAR)

DOORS SCHEDULE				
Sl.no.	Type	Size	CILL	LINTEL
1.	D1	1200 X 2100	00	2100
2.	D2	750 X 2100	00	2100
3.	GL1	4615X AS/ ELEVATION		
4.	GL2	4615X AS/ ELEVATION		
5.	W1	1200 X 1050	1050	2100
6.	W2	950 X 1050	1050	2100
7.	W3	950 X 2100	00	2100
8.	V2	900 X 900	1200	2100

TYPE -03 AREA CALCULATION							
AREA CALCULATION GROUND FLOOR							
	M					M	SQ. MT.
A	15.81	+	18.63	/2	X	5.73	98.647
a1	4/3	X	0.115		X	2.950	0.452
a1	4/3	X	0.115		X	2.950	0.452
							99.55
AREA CALCULATION FIRST FLOOR							
	M					M	SQ. MT.
B	13.27	+	16.19	/2	X	5.73	84.407
a1	4/3	X	0.115		X	2.950	0.452
b1	4/3	X	0.120		X	2.965	0.474
					TOTAL ADDITION AREA		85.33
	DEDUCTIONS						
	M					M	SQ. MT.
1	1.80				X	1.80	3.24
2	4.590	+	5.050	/2	X	2.270	10.94
3	5.290	+	5.470	/2	X	1.200	6.46
4	0.425	X	1.275	/2			0.27
5	0.225	X	1.220	/2			0.14
					TOTAL DEDUCTION AREA		21.05
	TOTAL FAR AREA ON FIRST FLOOR						
	85.33				-	21.05	**64.29**
AREA CALCULATION 2nd, 3rd & 4th FLOOR FLOOR							
	M					M	SQ. MT.
C	15.81	+	18.63	/2	X	5.73	98.647
a1	4/3	X	0.115		X	2.950	0.452
a1	4/3	X	0.115		X	2.950	0.452
					TOTAL ADDITION AREA		99.55
	DEDUCTIONS						
	M					M	SQ. MT.
1	1.80				X	1.80	3.24
2	4.590	+	5.050	/2	X	2.270	10.94
					TOTAL DEDUCTION AREA		14.18
	TOTAL FAR AREA ON 2nd, 3rd & 4th FLOOR FLOOR						
	99.55				-	14.18	**85.37**
TOTAL FAR TYPE -03							
GROUND FLOOR AREA							99.55
FIRST FLOOR							64.29
SECOND FLOOR							85.37
THIRD FLOOR							85.37
FOURTH FLOOR							85.37
							419.95
							AREA
							SQ. MT.
SCO TYPE -03							
GROUND COVERAGE							99.55
PLOT AREA							284.43
PERMISSIBLE FAR						1.50	426.65
FAR ACHIEVED							**419.95**
AREA CALCULATION MUMTY							
	M					M	SQ. MT.
D	4.12	+	5.53	/2	X	5.73	27.649
a1	4/3	X	0.115		X	2.950	0.452
					TOTAL MUMTY AREA		28.10
AREA CALCULATION BASEMENT							
	M					M	SQ. MT.
E	15.81	+	18.63	/2	X	5.73	98.647
a1	4/3	X	0.115		X	2.950	0.452
a1	4/3	X	0.115		X	2.950	0.452
					TOTAL BASEMENT AREA		99.55
COVERED AREA TYPE -03							
FAR AREA							419.95
BASEMENT AREA							99.55
MUMTY AREA							28.10
TOTAL COVERED AREA TYPE -03							**547.60**

TYPE-03 - 2 NOS

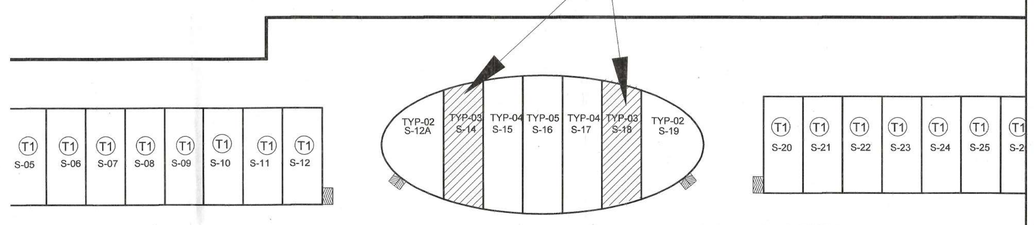

KEY PLAN

(RAM AVTAR BASSI) JD (HQ)

(SANJAY NARANG) ATP (HQ)

(R.S. BATTH) DTP (HQ)

(HITESH SHARMA) STP(M) HQ

(B.P. SINGH) CTP (HR)

(AMIT KHATRI, IAS) DTCP(HR)

SUBMISSION DRAWING	REV. NO. :- R0

DRAWING TITLE
TYPE- T03, FLOOR PLAN & AREA
S-14 & S-18

PROJECT TITLE :
PROPOSED SCO ON THE SITE AREA MEASURING **1.872 ACRES** OR **7575.00 SQ.MT.** OF BLOCK-C FALLING IN RESIDENTIAL PLOTTED COLONY AREA MEASURING 97.98125 ACRES (LICENCE NO. 15 Of 2011 Dated 07.03.2011 & 62 Of 2021 Dated 01.09.2021) IN , SECTOR -70A GURUGRAM

SCALE	1:100
DATE	27-02-2023

N

Drawing no. DG,TCP...28/59 (N)....Dated. 1/12/23.....

For Countrywide Promoters Pvt. Ltd.
Authorized Signatory

DEEPAK VIG B.Arch.
CA/2003/32557

Authorized Signatory | Architect / Town Planner

CLIENT :
COUNTRYWIDE PROMOTERS PVT. LTD. OT-14, 3RD FLOOR, NEXT DOOR, PARKLANDS, SECTOR-76, FARIDABAD, HARYANA-121004

SHEET :-
05