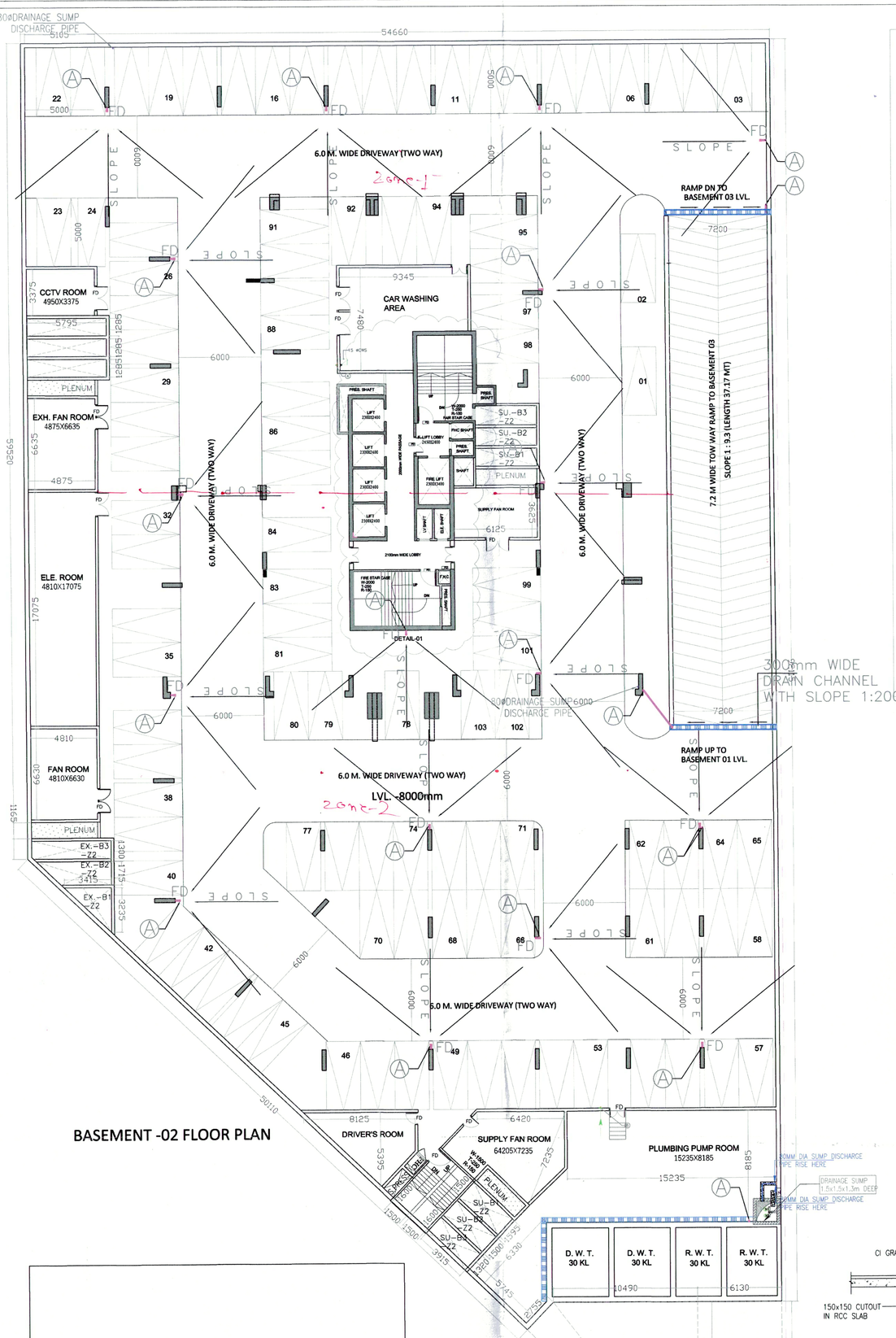

BASEMENT -02 FLOOR PLAN

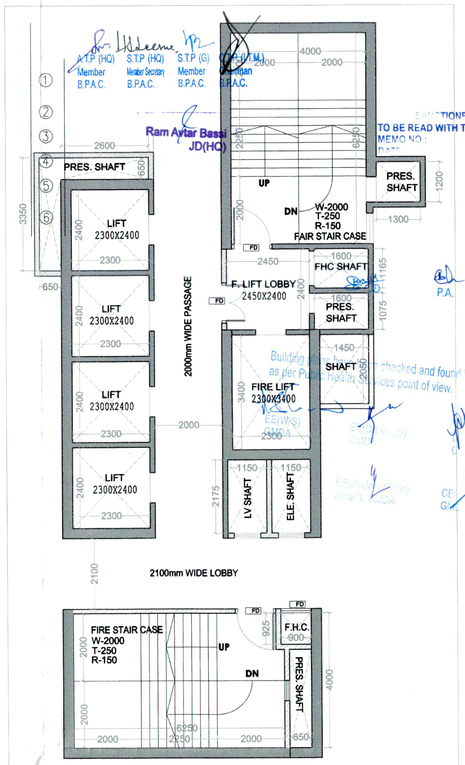

DETAIL-01

LEGEND:-

①	Ⓐ	100Ø DRAIN PIPE WITH 150X150mm CUTOUT IN FLOOR
②		80Ø SUMP RISER
③	⊠	CUTOUT (150X150mm)
④	- - - -	SUMP OUTLET PIPE IN CEILING LVL.
⑤		300mm WIDE DRAIN CHANNEL
⑥		DRAINAGE SUMP

DOOR / WINDOW SCHEDULE

NO.	SIZE	SILL LEVEL	LINTEL LVL	REMARK
FD	1200 X 2450	00 MM	2450 MM	SINGLE SHUTTER FIRE RATED DOOR
D0	1500 X 1500	00 MM	2450 MM	SINGLE SHUTTER FIRE RATED DOOR
D1	1200 X 2450	00 MM	2450 MM	SINGLE SHUTTER FLUSHED DOOR
D2	900 X 2450	00 MM	2450 MM	SINGLE SHUTTER FLUSHED DOOR
D3	750 X 2450	00 MM	2450 MM	SINGLE SHUTTER FLUSHED DOOR
D4	750 X 2450	00 MM	2450 MM	DOUBLE SHUTTER FLUSHED DOOR
SD1	900 X 2450	00 MM	2450 MM	DOUBLE SHUTTER FIRE RATED DOOR
SD1A	900 X 2450	00 MM	2450 MM	DOUBLE SHUTTER LOUVERED DOOR
SD2	1800 X 2450	00 MM	2450 MM	FOUR SHUTTER FIRE RATED DOOR
SD3	450 X 2450	00 MM	2450 MM	SINGLE SHUTTER FIRE RATED DOOR
SD4	1200 X 2450	00 MM	2450 MM	DOUBLE SHUTTER LOUVERED DOOR
SD5	600 X 2450	00 MM	2450 MM	SINGLE SHUTTER FIRE RATED DOOR
SD6	750 X 2450	00 MM	2450 MM	SINGLE SHUTTER FIRE RATED DOOR
V4	750 X 2450	00 MM	2450 MM	SINGLE SHUTTER LOUVER DOOR
V1	600 X 1250	1200 MM	2450 MM	LOUVERED WINDOW
V2	450 X 1250	1200 MM	2450 MM	LOUVERED WINDOW
V3	510 X 1250	1200 MM	2450 MM	LOUVERED WINDOW
V1A	700 X 2000	450 MM	2450 MM	LOUVERED ACCESSIBLE DOOR / WINDOW

NOTES:-
- FD,FD1,FD2, ARE 2HR FIRE RATED
- ALL INTERNAL AND EXTERNAL WALLS ARE R.C.C.

STRUCTURAL MEMBER

NON STRUCTURAL MEMBER
- ALL INTERNAL WALLS ARE OF 100MM AND EXTERNAL WALLS 150MM NON STRUCTURAL
- W.C. ARE ARTIFICIALLY LIT AND MECHANICALLY VENTILATED.
- BASEMENT IS FULLY FIRE SPRINKLERED & MECHANICALLY VENTILATED AND ARTIFICIALLY LITE.

ARCHITECT:
VIKAS AHLAWAT ARCHITECTS
ARCHITECTURE, INTERIOR & PLANNING
Unit No.303,Ninex Time Center, Sundhy Sector -54,Golf Course Road,Gurgaon
O :- 0124-4284293 M:- 0-9899158486 Mail :- ar.vikas.ahlawat@gmail.com

MEP CONSULTANT:
SANELAC CONSULTANTS PVT LTD.
C-64/2, Okhla Industrial Area, Phase II, New Delhi, Delhi 110020.
Tel. 011 40503959

STRUCTURAL CONSULTANT:
VITNTECH CONSULTANTS
CONSULTANT ENGINEERS & PROJECT MANAGERS
C-35, Pamposh Enclave, Great Kailash-I, New Delhi-1100148.
Tel. 43141516, Fax. 26296767 Email :-vintech@vintechconsultants.com

CLIENT:
WHITELAND
M/s. Whiteland Corporation Private Limited.

DESIGN CONSULTANT :
Architect Hafeez Contractor
29 Bank Street, Fort, Mumbai 400 023 Tel : 2266 1920

PROJECT:-
PROPOSED BUILDING PLAN FOR GROUP HOUSING COLONY AN AREA MEASURING 5.785 ACRES UNDER TOD POLICY DATED 09.02.2016(LICENCE NO. 92 OF 2022 DATED 12.07.2022) IN SECTOR- 76, GURUGRAM BEING DEVELOPED BY WHITELAND CORPORATION PVT. LTD.

OWNERS SIGNATURE:-	ARCHITECT SIGNATURE:-
For Whiteland Corporation Private Limited Authorised Signatory	Ar. Vikas Ahlawat

DRAWING TITLE :
BASEMENT 02 PLAN & AREA CAL. TOWER-09

DATE:- DEC.2022 | SCALE:- 1:100 | N | SHEET NO. T9-B-02

TOTAL PARKING- 103

BASEMENT-02 AREA DETAIL (NON F.A.R.)

S.N.O.	NO.	PREFIX	BREATH	LENGTH	AREA
BASEMENT 1 AREA					4665.056
TOTAL ADDITION					4,665.056
SUBTRACTION					
1	1	1	6.130	13.750	84.288
2	1	0.5	10.490	13.750	72.119
3	1	0.5	2.755	17.070	23.514
TOTAL SUBTRACTION					179.920
TOTAL BASEMENT 02 AREA					**4,485.136**

BASEMENT-02 UNDER AREA SERVICES

S.N.O.	NO.	PREFIX	BREATH	LENGTH	AREA
BASEMENT 1 AREA UNDER SERVICES					1133.844
TOTAL ADDITION					1,133.844
SUBTRACTION					
1	1	1	6.130	13.750	84.288
2	1	0.5	10.490	13.750	72.119
3	1	0.5	2.755	17.070	23.514
TOTAL SUBTRACTION					179.920
TOTAL BASEMENT 02 AREA UNDER SERVICES					**953.924**

BASEMENT - 02 AREA LEFT FOR PARKING

ADDITIONS					
S.N.O.	NO.	PREFIX	LENGTH	BREATH	AREA
BASEMENT 2 AREA					4485.136
DEDUCTION					
S.N.O.	NO.	PREFIX	LENGTH	BREATH	AREA
BASEMENT 02 AREA UNDER SERVICES					953.924
TOTAL DEDUCTION AREA					953.924
TOTAL BASEMENT 2 AREA LEFT FOR PARKING					**3531.212**

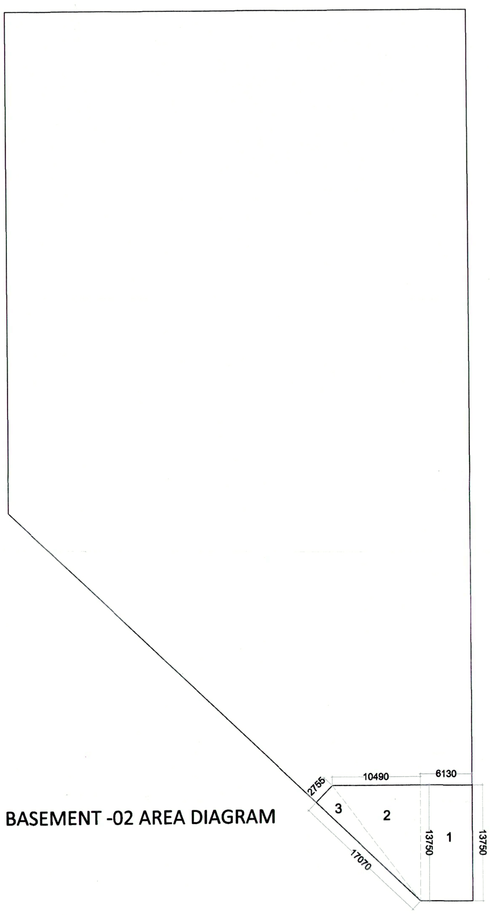

BASEMENT -02 AREA DIAGRAM

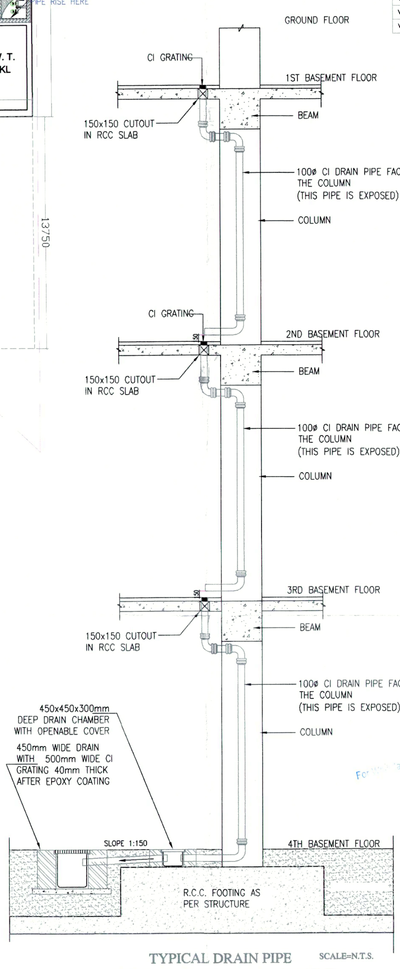

TYPICAL DRAIN PIPE FROM GROUND TO L.BASEMENT

SCALE=N.T.S.