This is a "PROVISIONAL BUILDING PLAN" approved only for the purpose of inviting objections from the general public

ATP(HQ) | SE(HQ) Member Secretary BPAC | SE(HQ) Member BPAC | Chairman BPAC

TO BE READ WITH THIS OFFICE MEMO NO.: 30250 DATED: 6/10/2022

DDT(HQ) MEMBER BPAC

Checked and found ok for Public Hearing (Internal) Service only subject to comments in forwarding letter No. 58360-2022

Rana Avtar Bassi AD(HQ)

Superintending Engineer (HQ) for Chief Engineer-I HSVP, Panchkula

J.D. | P.A. | A.T.P.

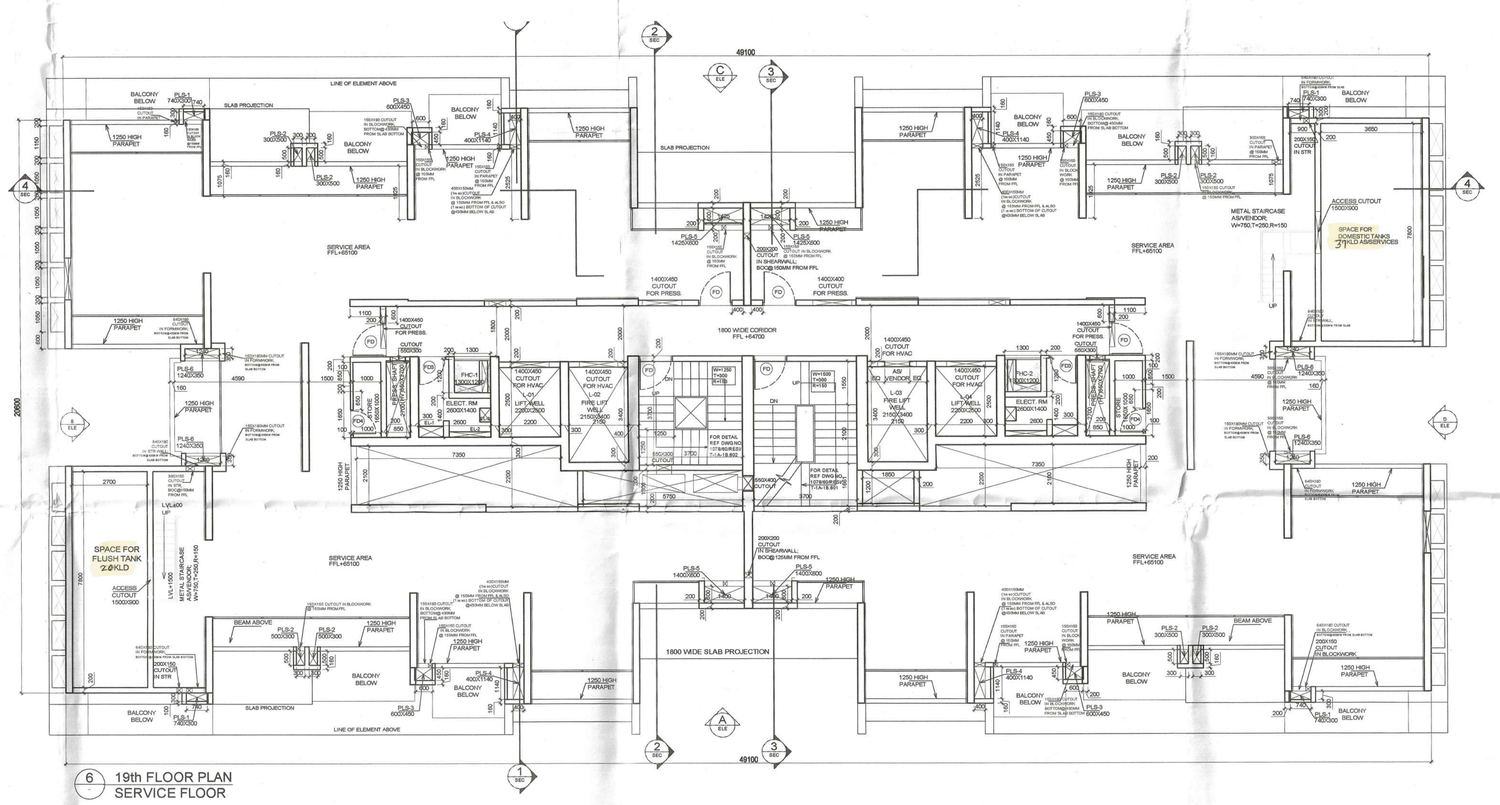

6 19th FLOOR PLAN
SERVICE FLOOR

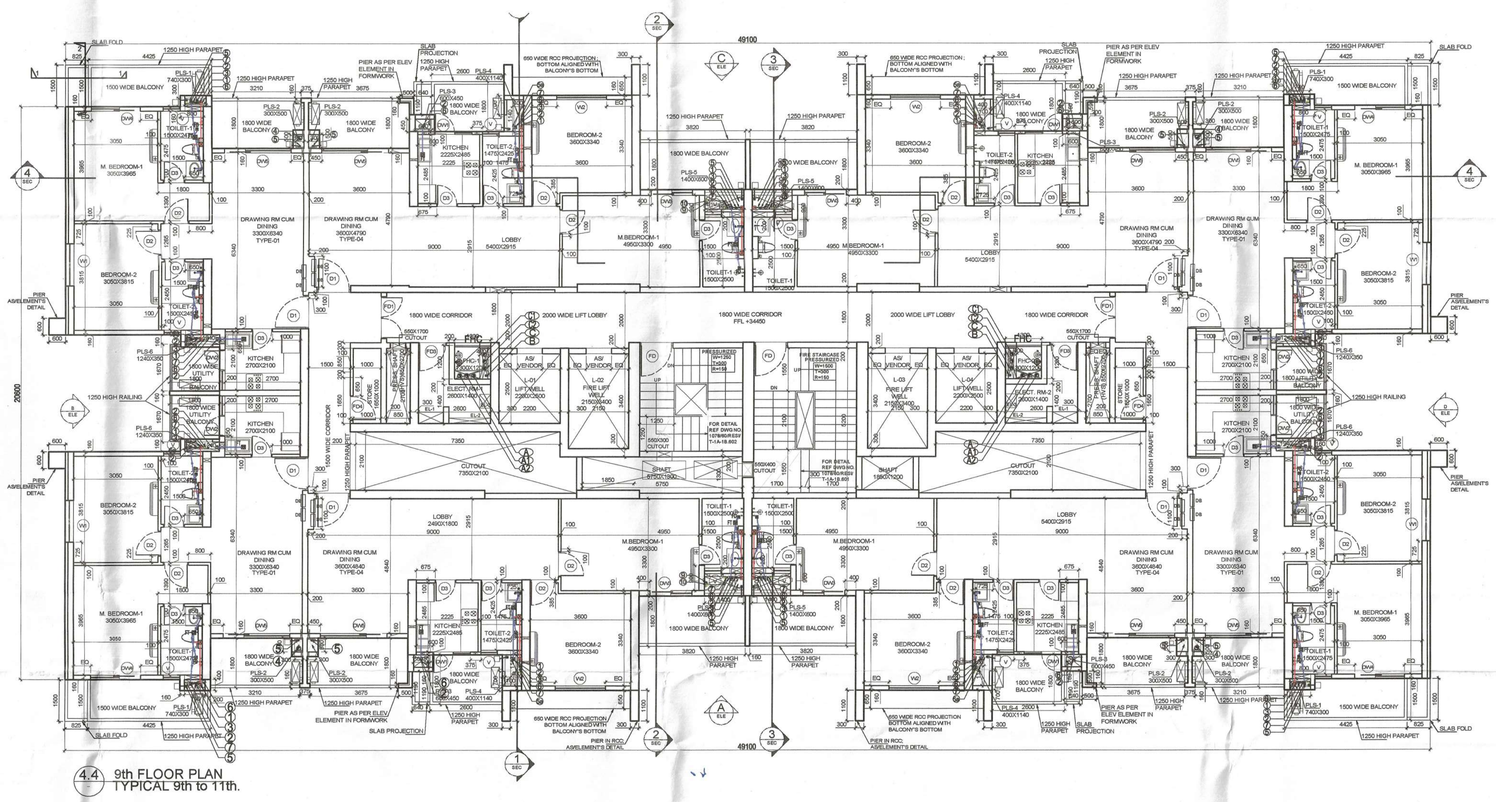

4.4 9th FLOOR PLAN
TYPICAL 9th to 11th.

PLUMBING LEGEND:-	
1	100ø SOIL PIPE / VENT PIPE
2	100ø WASTE / VENT PIPE
3	75ø VENT PIPE
4	150ø RAIN WATER PIPE
5	75ø BALCONY DRAIN PIPE
5a	75ø UTILITY BALCONY DRAIN PIPE
6	DOMESTIC DOWN TAKE
7	FLUSHING DOWN TAKE
9	DOMESTIC RISER PIPE
10	FLUSHING RISER PIPE
AD	ACCESS DOOR
□	KHURRA 200X200 (FOR BALCONY)
ø	FLOOR DRAIN (FD)
●	FLOOR TRAP (FT)
F	FIRE HOSE CABINET
CO	150x150mm CUTOUT FOR WC.FT
CI	100x100mm CUTOUT FOR FD
■	75x75mm CUTOUT FOR WASH BASIN

A	150ø FIRE HYDRANT LOW ZONE
A1	150ø FIRE HYDRANT MID. ZONE
A2	150ø FIRE HYDRANT HIGH ZONE
B	80ø FIRE DRAIN PIPE
C	150ø FIRE SPRINKLER LOW ZONE
C1	150ø FIRE SPRINKLER MID. ZONE
C2	150ø FIRE SPRINKLER HIGH ZONE

NOTE:-
ALL SERVICES SHAFTS WILL BE SEALED AT EVERY FLOOR LEVEL AFTER INSTALLING SERVICES.

GENERAL NOTES :

1. DRAWINGS IN PL & FF SERIES REPRESENTS PLUMBING AND FIRE SUPPRESSION SYSTEM DETAIL.
2. IN CASE OF ANY DISCREPANCY IT SHOULD BE BROUGHT TO THE NOTICE OF ARCHITECT / PROJECT MANAGER / CONSELTANT.
3. DRAWING SHOULD NOT BE SCALED.
4. ALL DIMENSIONS MENTIONED MUST BE FOLLOWED.
5. THIS DRAWING SHOULD BE READ IN COMBJUNCTION WITH RELEVANT ARCHITECTURAL , LAND SCAPING, STRUCTURAL AND OTHER SERVICES DRAWING.

5. ALL SERVICES SHAFTS SHOULD BE SEALED AT EVERY FLOOR LEVEL AFTER INSTALLING SERVICES.

DOOR WINDOW SCHEDULE

NAME	WIDTH	SILL	LINTEL	LOCATION	UNIT TYPE
D2	900	0	2250	BEDROOM	1-4
D3	750	00	2250	TOILET, KITCHEN	1-4
DW1	1350	1100	2400	KITCHEN	4
DW2	1450	1100	2400	KITCHEN	1
DW3	1500	00	2400	BEDROOM	4
DW4	1800	00	2400	BEDROOM	1
DW5	2400	00	2400	DRAWING/DINING	1-4
DW6	3000	00	2400	LOBBY ENTRY	--
W1	1500	300	2400	BEDROOM	1
W2	1800	300	2400	BEDROOM	4
W3	2400	300	2400	COMMON RM REFUGE FLOOR	--
V	600	1200	2400	TOILET VENTILATOR	1-4
FD	1200	00	2100	ST ARCASE 2HR FIRE RATING	--
FD1	1500	00	2400	LFT LOBBY 2 HR FIRE RATING	--
D1	1050	00	2400	UNIT ENTRY	1-4
FD3	1000	00	2100	ELECTRICAL ROOM 2 HR FIRE RATING	--
FD4	900	00	2100	GARBAGE ROOM HR FIRE RATING	--

NOTES:
- ALL LIFTS SHALL HAVE 100% POWER BACK-UP.
- ALL ELECTRICAL INSTALLATIONS SHALL BE AS PER PROVISION OF NBC.
- FIRE-FIGHTING / SAFETY PROVISIONS WILL BE AS PER RELEVANT NBC PROVISIONS.
- BASEMENT AREA SHALL HAVE MECHANICALLY VENTILATED AS PER RELEVANT CODE.
- ALL TOILETS ARE VENTILATED AS PER HARYANA BUILDING CODE 2017.
- BUILDING HAS AUTOMATIC SPRINKLER SYSTEM WHEREVER REQUIRED BY NBC.
- BUILDING WILL BE DESIGNED (STRUCTURES) AS PER RELEVANT I.S. CODES FOR EARTHQUAKE RESISTANCE.
- ALL FIRE EXITS ARE INTERCONNECTED THROUGH CORRIDOR / BRIDGES.
- SOLAR PANELS OF REQUIRED CAPACITY SHALL BE PROVIDED ON ROOF TOP AS PER HAREDA /ZONING NORMS.
- ONE EXTERNAL WALL TOWARDS BALCONY SIDE IN ANY ONE OF THE ROOMS IN RESIDENTIAL APARTMENT SHOULD BE IN 1 HR. FIRE RATED WITH PROVISION OF SPRINKLER ON INTERNAL SIDE OF THE SAME WALL.
- ALL HANDICAP RAMPS WITH RAILING.

KEY PLAN

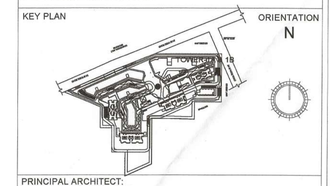

ORIENTATION
N

PRINCIPAL ARCHITECT:

ACPL Design Ltd
ISO:9001:2008
Architecture Management Planning
E-24,South Extension-I New Delhi 110049, India
T: +91 11 24622196 +91 11 24646758
F: +91 11 24634069
www.acplonline.com
E: contact@acplonline.com

PROJECT:-

REVISED BUILDING PLANS OF MIXED LAND USE COLONY (70% RESIDENTIAL + 30% COMMERCIAL) MEASURING 14.4125 ACRES (LICENCE NO. 15 OF 2017 DATED-02.05.2017) UNDER TOD POLICY DATED 09.02.2016 IN SECTOR-65, GURUGRAM BEING DEVELOPED BY MANGLAM MULTIPLEX PVT. LTD.

FOR MANGLAM MULTIPLEX PVT. LTD.
DIRECTOR/DIRECTOR

OWNER/AUTH. SIGNATURE | ARCHITECT'S SIGNATURE

DRAWING TITLE

9TH TO 11TH & 19TH.FLOOR PLAN, (TOWER-1A-1B)

DRAWING NO. A-21 | SCALE :- 1:100

1:0.98458