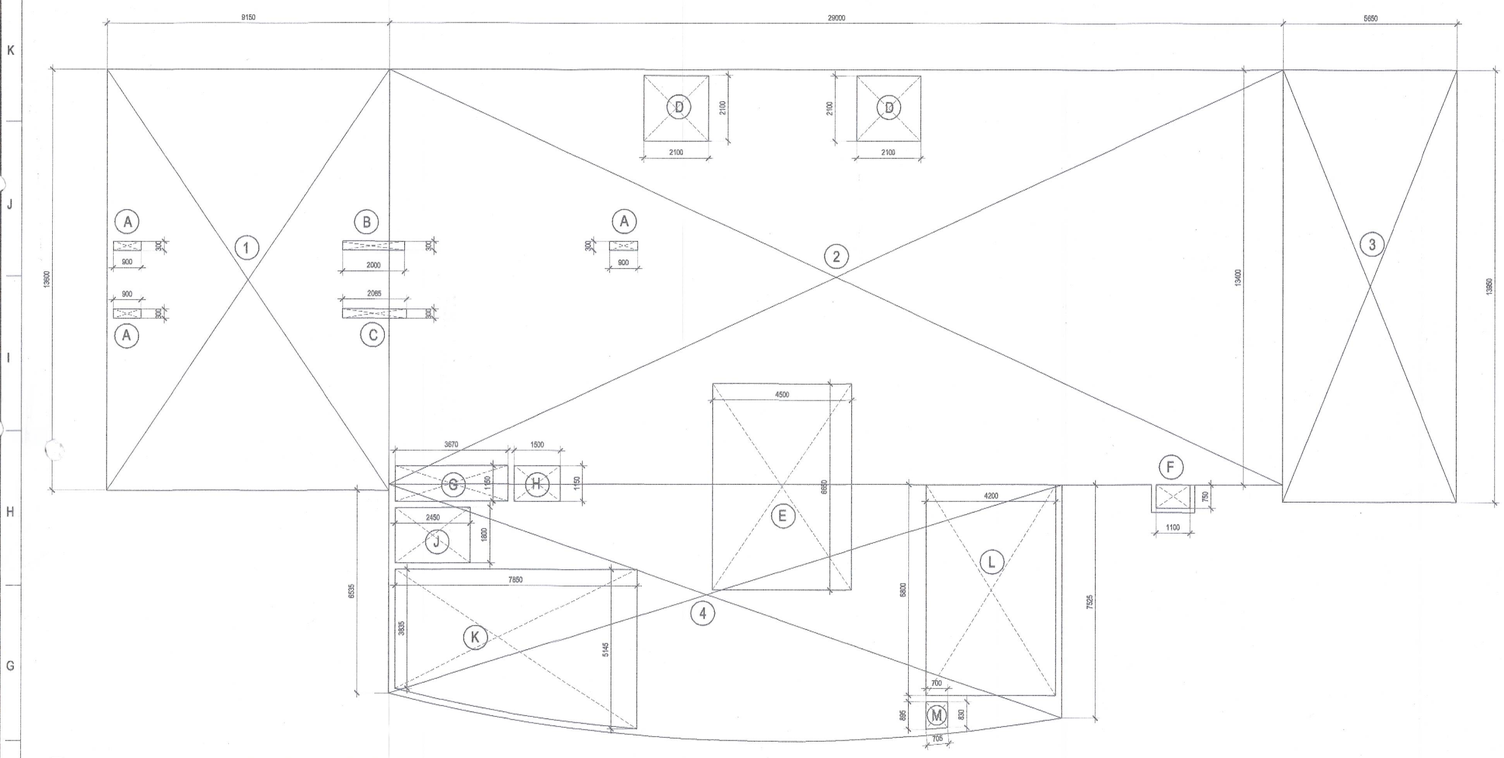

01 SECOND FLOOR AREA DIAGRAM (COMMUNITY CENTRE-02)
SCALE 1: 100

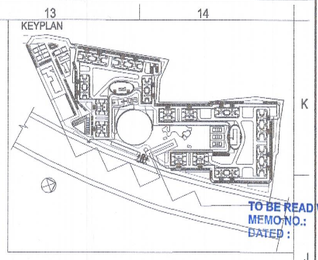

TO BE READ WITH THIS OFFICE MEMO NO.:
DATED :

COMMUNITY CENTRE-02 SECOND FLOOR F.A.R /COVERAGE CALCULATION								
ADDITION								
NO	QTY			L		B	TOTAL	
1	1		X	9.150	X	13.600	124.440	SQM.
2	1		X	29.000	X	13.400	388.6	
3	1		X	5.650	X	13.950	78.8175	
4							172.500	
TOTAL							764.358	SQM.
DEDUCTION								
A	3		X	0.900	X	0.300	0.810	SQM.
B	1		X	2.000	X	0.300	0.600	SQM.
C	1		X	2.065	X	0.300	0.620	SQM.
D	2		X	2.100	X	2.100	8.820	SQM.
E	1		X	4.500	X	6.650	29.925	SQM.
F	1		X	1.100	X	0.750	0.825	SQM.
G	1		X	3.670	X	1.150	4.221	SQM.
H	1		X	1.500	X	1.150	1.725	SQM.
J	1		X	2.450	X	1.800	4.410	SQM.
K	1						36.096	SQM.
L	1		X	4.200	X	6.800	28.560	SQM.
M	1						0.605	SQM.
						TOTAL	117.216	SQM.
						TOTAL SECOND FLOOR F.A.R./COVERAGE =	647.142	SQM.

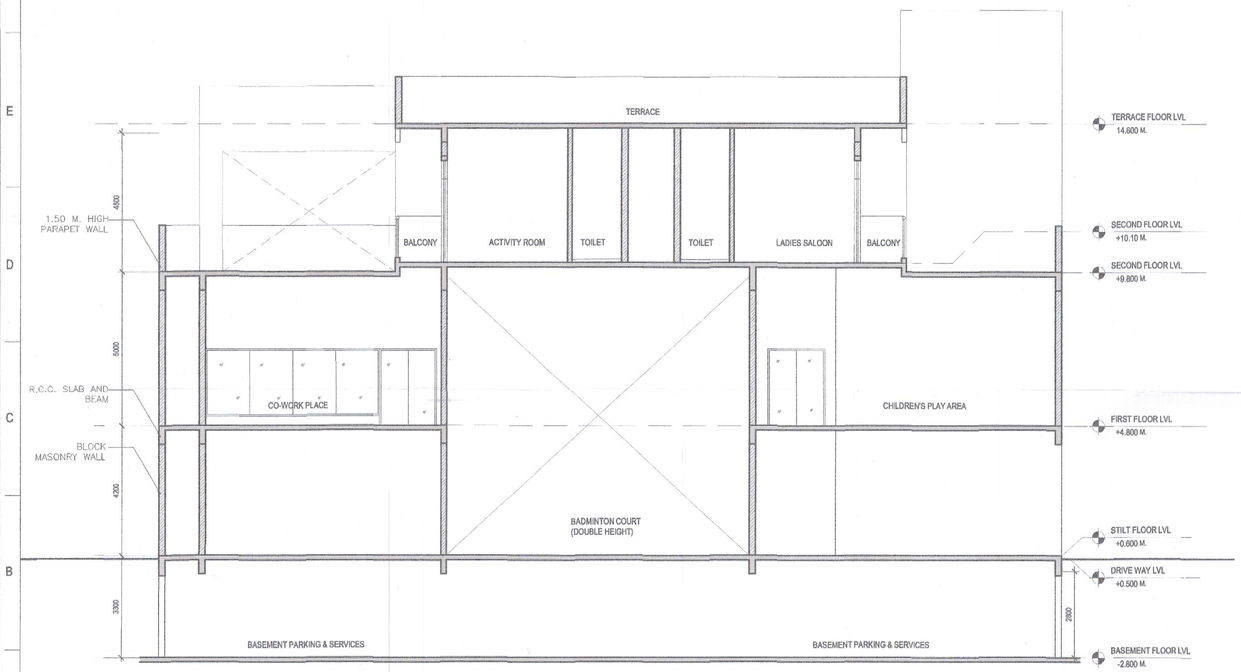

02 SECTION - S1 (COMMUNITY CENTRE-02)
SCALE 1: 100

COMMUNITY CENTRE-02 MUMTY FLOOR COVERED AREA CALCULATION							
NO.	QTY.		L		B		SQM.
ADDITION							
1						68.837	SQM.
2	1		9.000	X	3.800	34.200	SQM.
3	1		4.600	X	7.200	33.120	SQM.
4						1.390	SQM.
TOTAL						137.547	SQM.
DEDUCTION							
F	1		9.000	X	3.600	32.400	SQM.
G	1		3.670	X	1.150	4.221	SQM.
H	1		1.500	X	1.150	1.725	SQM.
J	1		2.450	X	1.800	4.410	SQM.
K						36.096	SQM.
L	1		4.200	X	6.800	28.560	SQM.
M						0.605	SQM.
TOTAL						108.017	SQM.
TOTAL COVERED AREA =						29.531	SQM.

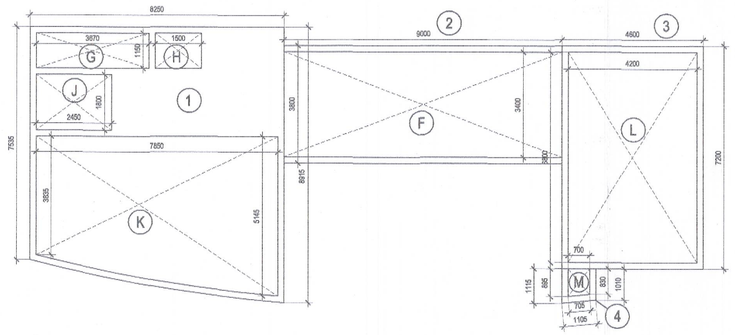

03 MUMTY FLOOR COVERED AREA DIAGRAM (COMMUNITY CENTRE-02)
SCALE 1: 100

FOR OFFICE USE ONLY

This is a "PROVISIONAL BUILDING PLAN" approved only for the purpose of inviting objections from the general public

STP(HQ) Member Secretary BPAC | Member BPAC | Chairman BPAC

DDT (HQ) Member BPAC

J.D. | P.A. | A.T.P.

SCHEDULE OF OPENINGS

DOORS

SL.NO	TYPE	SIZE	SILL	LINTEL
01.	GD1	4400 X 2400	---	2400
02.	GD2	6650 X 2400	---	2400
03.	GD3	9600 X 2400	---	2400
04.	D1	850 X 2400	---	2400
05.	D2	850 X 2200	---	2200
06.	D3	1200 X 2400	---	2400
07.	D4	1200 X 2400	---	2400
08.	FD1	1800 X 2400	---	2400
09.	SD1	2400 X 2400	---	2400
10.	SD2	1500 X 2400	---	2400
11.	SD3	850 X 2200	---	2200
12.	V1	1150 X 930	1270	2200
13.	KW	5250 X 1030	1170	2200
14.	FHS	930 X 1030	1170	2200

NOTES

1. DIMENSIONS ARE NOT TO BE SCALED.
2. ALL DIMENSIONS ARE IN MM UNLESS MENTIONED OTHERWISE .
3.ALL ELECTRICAL INSTALLATIONS SHALL BE AS PER PROVISIONS OF NBC.
4. FIRE FIGHTING SAFETY PROVISIONS WILL BE AS PER RELEVANT NBC PROVISIONS.
5. BOUNDARY WALL AND GATE AS PER STANDARDS.
6. ALL WALLS ARE OF 150 MM THK. CONCRETE WALL.
7. RAIN WATER HARVESTING SYSTEM SHALL BE PROVIDED AS PER CENTRAL GROUND WATER AUTHORITY NORMS/HARYANA GOVT.
8. ALL WINDOWS & VENTILATORS ARE OPENABLE.
9. ALL MECHANICALLY VENTILATED & ARTIFICIALLY LIT TOILETS ARE PROVIDED WITH 24hr POWER BACKUP.

LICENCE HOLDER'S SIGNATURE

SOBHA LIMITED

SIGN.....

LICENCE HOLDERS

CHINTELS INDIA LIMITED
A-11, KAILASH COLONY
NEW DELHI
& OTHERS

ARCHITECTS SIGNATURE

Ar. NIKHIL THAKUR
COA REGD. NO. CA/2011/53111
SOBHA LIMITED
5th Floor Rider House, Plot No. 136 P,
Sector-44, Gurugram-122002, Haryana
Phone :- 0124-4855555

SIGN.....

NORTH

ARCHITECTS

SOBHA LIMITED.
'SOBHA', REGD. & CORPORATE OFFICE,
SARJAPUR - MARATHAHALLI OUTER RING ROAD (ORR),
DEVARABISANAHALLI, BELLANDUR POST, BANGALORE - 560 103, INDIA.
TEL : (080) 49320000, E-mail: architects@sobha.com

PROJECT NO : 0385	SCALE : 1:100	SHEET NO: AS 122
SHEET SIZE: A1	DATE : 01/11/2015	
DEALT BY: BIBHA	CHKD. BY: V.G	

SHEET TITLE

SECOND FLOOR AREA DIAGRAM AND SECTION

COMMUNITY CENTRE -02

PROJECT TITLE

REVISED BUILDING PLAN
OF GROUP HOUSING COLONY SOBHA CITY MEASURING 39.375 ACRES (LICENCE NO.-107 OF 2008 DATED 27.05.2008 IN SECTOR 108,GURGAON BEING DEVELOPED BY M/S SOBHA LTD.)