PRODUCED BY AN AUTODESK EDUCATIONAL PRODUCT

(HITESH SHARMA) STP(M)HQ
(P.P.SINGH) CTP(HR)
(K.MAKRAND PANDURANG, IAS) DTCP(HR)
(SANJAY NARANG) ATP(HQ)
(DINESH KUMAR) SD(HQ)

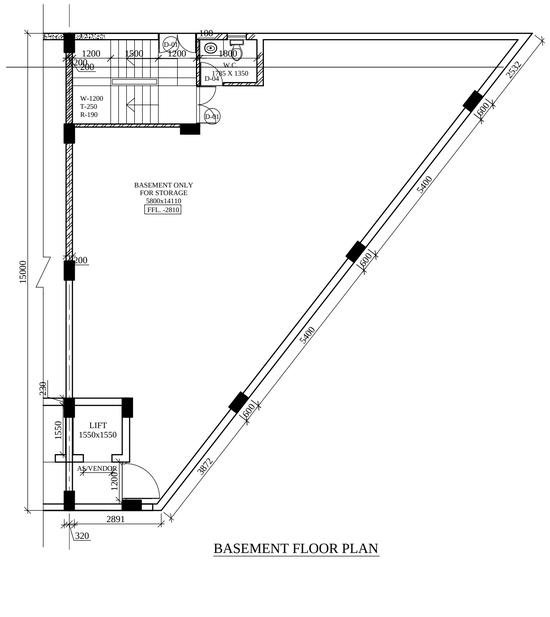

BASEMENT FLOOR PLAN

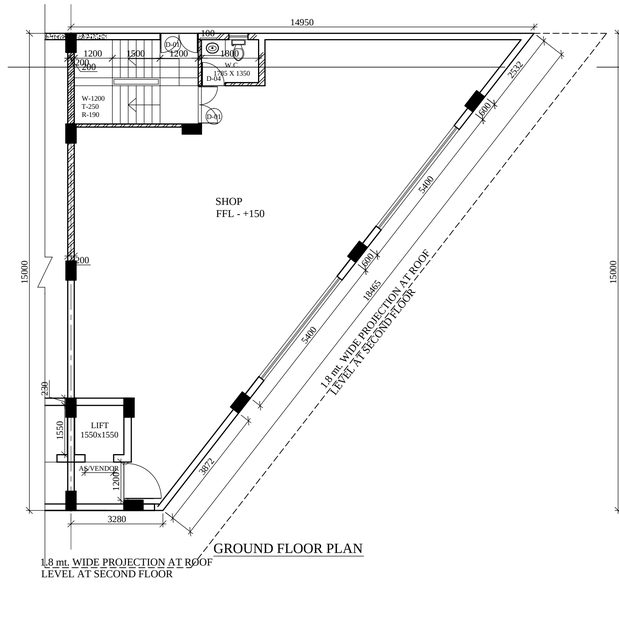

GROUND FLOOR PLAN

1.8 mt. WIDE PROJECTION AT ROOF
LEVEL AT SECOND FLOOR

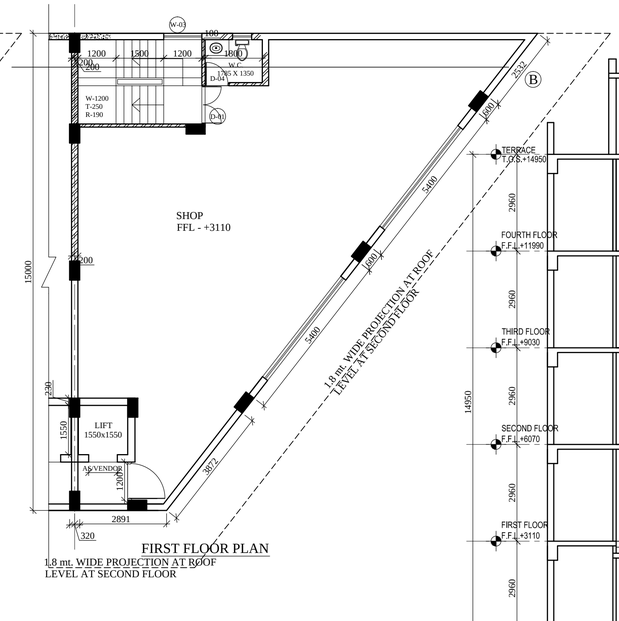

FIRST FLOOR PLAN

1.8 mt. WIDE PROJECTION AT ROOF
LEVEL AT SECOND FLOOR

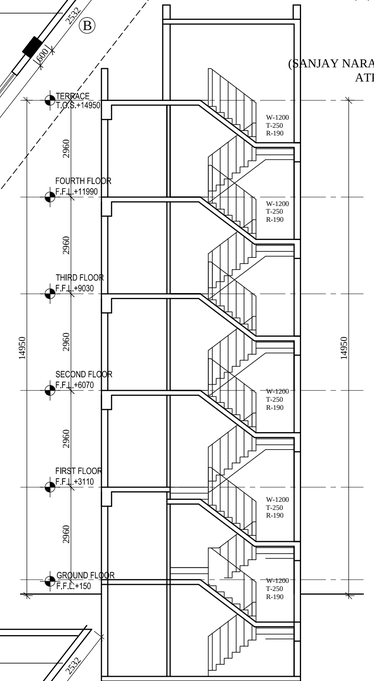

SECTION

AREA CHART

PROPOSED GROUND FLOOR FAR = (A)
= 136.717 Sq.Mt.

PROPOSED FIRST FLOOR FAR
= A-(B+C)
= 136.717- (3.900 X 2.650 + 1.550X1.550)
= 136.717- (10.335+2.402)
= 123.98 Sq.Mt.

PROPOSED SECOND FLOOR FAR
= SAME AS FIRST FLOOR AREA
= 123.98 Sq.Mt.

PROPOSED THIRD FLOOR FAR
= SAME AS SECOND FLOOR AREA
= 123.98 Sq.Mt.

PROPOSED FOURTH FLOOR FAR
= SAME AS THIRD FLOOR AREA
= 123.98 Sq.Mt.

TOTAL FAR
=
(GROUND+FIRST+SECOND+THIRD+FOURTH)
= 136.717+ 123.98 + 123.98 + 123.98 + 123.98
= 632.637 Sq.Mt.

TOTAL NON FAR

STAIRCASE WELL & MACHINE ROOM
= (TYP. FL. STAIRCASE X 3 + MUMTY + MACHINE ROOM)
= (BX3) + (D+E)
= (3.900X2.650X4) + (4.200X3.050 + 1.895X2.010)
= 41.34 + 12.81 + 3.80
= 57.95

PROPOSED NON FAR BASEMENT
= 136.717 Sq.Mt.

TOTAL NON FAR = 57.95 + 136.717 = 194.667 Sq.Mt.

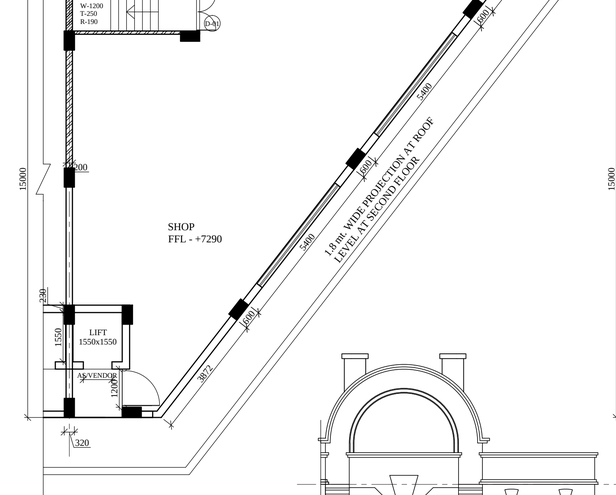

SECOND FLOOR PLAN

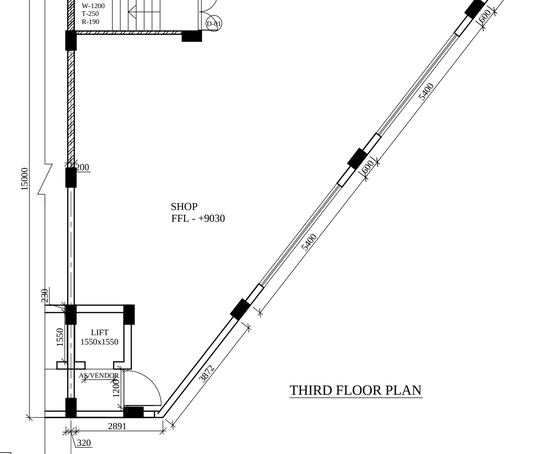

THIRD FLOOR PLAN

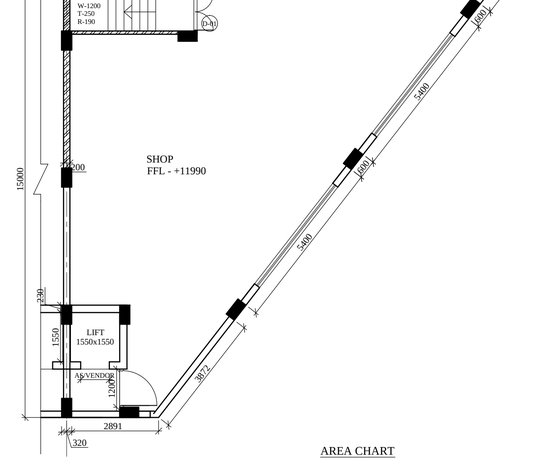

FOURTH FLOOR PLAN

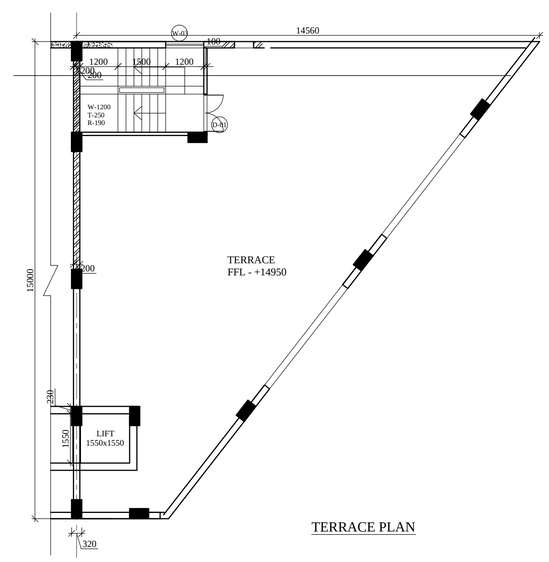

TERRACE PLAN

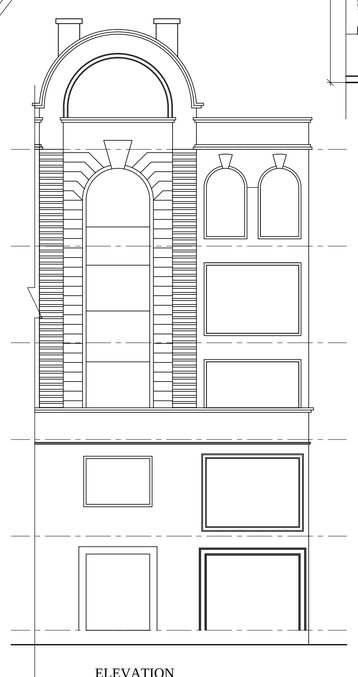

ELEVATION

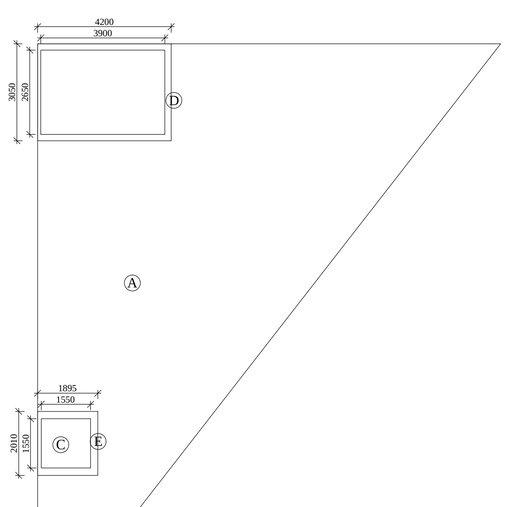

AREA CHART

PROPOSED GROUND FLOOR FAR - (A)
= 130.864 Sq.Mt.

PROPOSED FIRST FLOOR FAR
= A-(B+C)
= 130.864- (3.900 X 2.650 + 1.550X1.550)
= 130.864- (10.335+2.402)
= 118.127 Sq.Mt.

PROPOSED SECOND FLOOR FAR
= SAME AS FIRST FLOOR AREA
= 118.127 Sq.Mt.

PROPOSED THIRD FLOOR FAR
= SAME AS SECOND FLOOR AREA
= 118.127 Sq.Mt.

PROPOSED FOURTH FLOOR FAR
= SAME AS THIRD FLOOR AREA
= 118.127 Sq.Mt.

TOTAL FAR
=
(GROUND+FIRST+SECOND+THIRD+FOURTH)
= 130.864 + 118.127 + 118.127 + 118.127 + 118.127
= 603.372 Sq.Mt.

TOTAL NON FAR

STAIRCASE WELL & MACHINE ROOM
= (TYP. FL. STAIRCASE X 3 + MUMTY + MACHINE ROOM)
= (BX3) + (D+E)
= (3.900X2.650X4) + (4.200X3.050 + 1.895X2.010)
= 41.34 + 12.81 + 3.80
= 57.95

PROPOSED NON FAR BASEMENT
= 130.864 Sq.Mt.

TOTAL NON FAR = 57.95 + 130.864 = 188.814 Sq.Mt.

DOOR WINDOW SCHEDULE

S.NO	TYPE	SIZE	OILL LEVEL	LINTEL LEVEL
1	D1	1200 x 2400	---	2400
2	D2	1200 x 2400	---	2400
3	D3	1200 x 2400	---	2400
4	D4	750 x 2100	---	2100
5	SD-01	3190 x 2950	---	2950
6	W1	3645 x 3700	---	3700
7	W2	3645 x 2950	---	2950
8	W2a	3645 x 2650	---	2650
9	W3	1200 x 1350	1050	2400
10	W4	600 x 1200	1200	2400
11	W5	3190 x 2950	---	2950
12	W5a	3190 x 2650	---	2650

M/s GILLSON CHITS PVT. LTD. IN COLLABORATION WITH
M/s BRISK INFRASTRUCTURE & DEVELOPERS PVT. LTD.

STANDARD DESIGN COMMERCIAL PLOTTED COLONY OVER AN AREA MEAURING 3.6423 ACRES IN THE REVENUE ESTATE OF VILLAGE-CHAUMA IN SECTOR -109 , GURUGRAM- MANESAR URNBAN COMPLEX

PLANS & ELEVATIONS

SHEET
SCO NO. - 41
scale-1:100

OWNER'S SIGNATURE

Kanwar Gaurav
KANWAR GAURAV
ARCHITECT
CA/2016/76162

ARCHITECT'S SIGNATURE

SWAIT ARCH
"SWAIT KAMAL"
ARCHITECTS, ENGINEERS
& INTERIOR DESIGNERS
E-1081, SARASWATI VIHAR, DELHI
WWW.SWAITARCH.COM

DRG. NO.
12

PRODUCED BY AN AUTODESK EDUCATIONAL PRODUCT
PRODUCED BY AN AUTODESK EDUCATIONAL PRODUCT
PRODUCED BY AN AUTODESK EDUCATIONAL PRODUCT