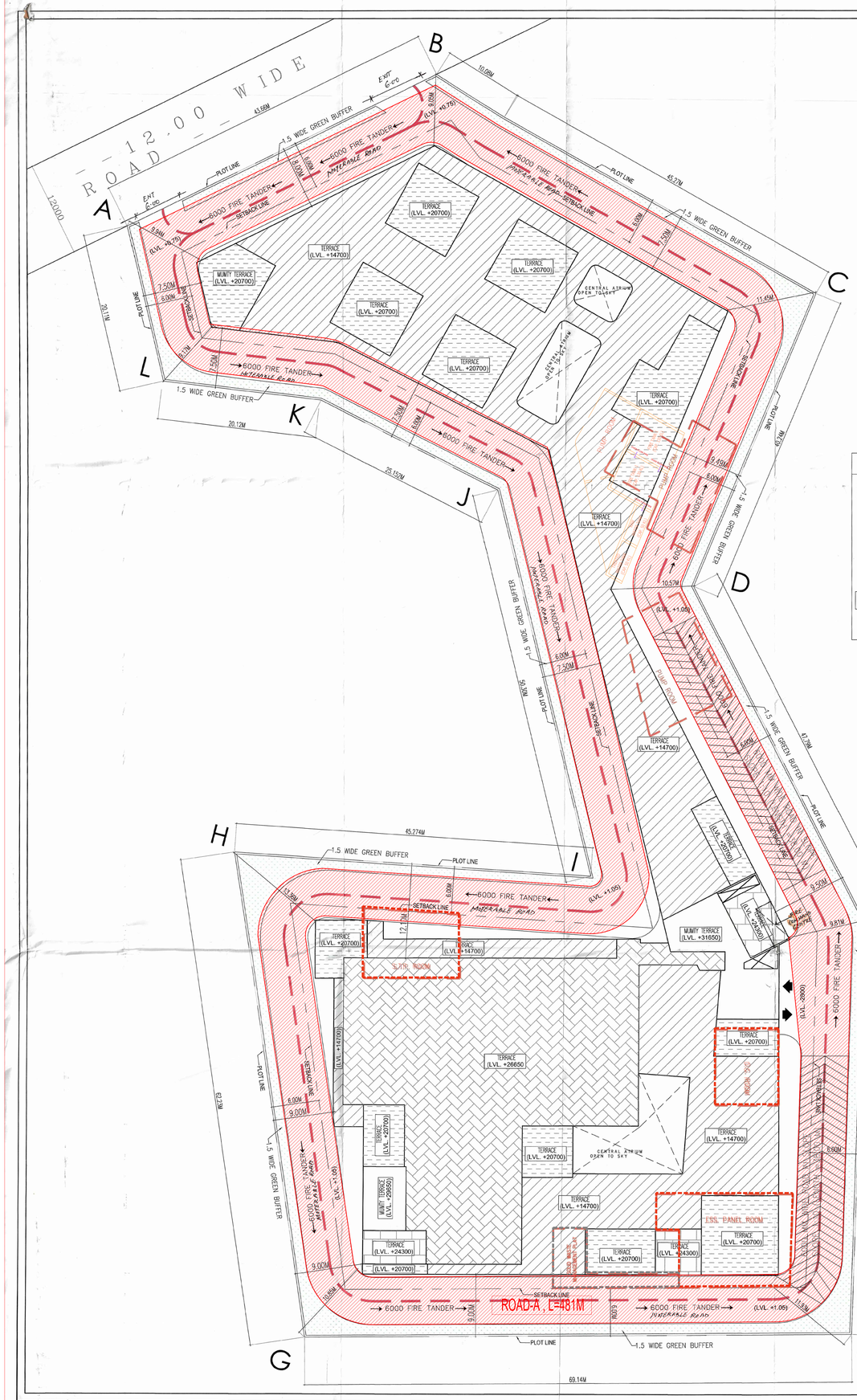

AREA CALCULATION FOR 82A AMEYA GROUP

TOTAL PLOT AREA (2.1777 ACRES)	8812.825
PERMISSIBLE GROUND COVERAGE @ 60%	5287.695
PERMISSIBLE F.A.R @ 1.75	15422.444
PROPOSED GROUND COVERAGE @ 47.00%	4142.105
PROPOSED F.A.R. @ 1.495	13180.189

		FAR AREA (A1)	NON FAR AREA (A2)	TOTAL BUILT UP AREA (A) = (A1+A2)
2	1st. BASEMENT FLOOR	0.000	5297.786	5297.786
3	GROUND FLOOR	4142.105	0.000	4142.105
4	FIRST FLOOR	3380.775	338.642	3719.417
5	SECOND FLOOR	3380.775	338.642	3719.417
6	THIRD FLOOR	1228.985	310.550	1539.535
7	FOURTH FLOOR	1047.549	246.659	1294.207
9	MUMTY ,M.ROOM & O.H.WATER TANK	0.000	178.819	178.819
	TOTAL AREA	13180.189	6711.097	19891.286

N O T E S

THIS DEVELOPMENT HAS BEEN CONCEIVED, DESIGNED AND DRAFTED ON THE BASIS OF THE FOLLOWING

1. ALL USEABLE OFFICE SPACES/RETAIL SPACES (LIKE SHOP AREAS, ENTERTAINMENT) WILL BE AIR–CONDITIONED. THEREFORE,NO PROVISION HAS BEEN MADE FOR NATURAL VENTILATION OF SPACES.
2. ALL TOILETS/KITCHENS WILL BE MECHANICALLY VENTILATED.CONDITIONED AIR FROM THE FLOOR WILL BE SUCKED IN TO THE TOILETS/KITCHENS AND VENTED OUT THROUGH A VENT SHAFT
3. ALL SPACES (OFFICE SPACES,RETAIL SPACES, SERVICE AREAS, PARKING BASEMENT,ETC) WILL BE ARTIFICIALLY LIT. ANY NATURAL LIGHT WHICH IS AVAILABLE IN THE OFFICE SPACES IS ONLY INCIDENTAL AND NOT ESSENTIAL TO THE FUNCTIONING OF THE BUILDING.
4. 100% STANDBY GENERATING CAPACITY WILL BE PROVIDED FOR THE ENTIRE ELECTRICAL REQUIREMENT OF THE TOTAL SCHEME. THIS THEREFORE INCLUDES STANDBY GENERATION FOR ALL COMMON SERVICES, FIRE SERVICES, LIFTS ETC. AND ALSO THE ENTIRE ELECTRICAL LOAD FOR VENTILATION,AIR–CONDITIONING, LIGHTS AND ALL OFFICE EQUIPMENT.
5. BASEMENT WILL BE ARTIFICIALLY VENTILATED.
6. THIS BUILDING WILL BE SPRINKLED AS PER NBC NORMS.
7. HANDICAP RAMP WITH RAILING
8. THIS BUILDING IS MECHANICALLY VENTILATED & FULLY AIR–CONDITIONED.
9. NOT ALL SERVICES MARK IN BASEMENT

PARKING DETAIL :–

ECS REQUIRED :–

PARKING REQUIREMENT FOR COMMERCIAL AREA
1 EQ. CAR SPACE PER 50 SQ.MT. OF FAR AREA
TOTAL FAR AREA= 13180.189 SQ.MT.

PARKING REQUIRED = $\frac{13180.189 \times 1}{50}$ = 263.60 CAR

NET PARKING REQUIRED = 264 CAR

ECS PROVIDED :–

1st. BASEMENT FLOOR PLAN = 134X2 = 268

NET PARKING PROVIDED = 268 ECS

SCHEDULE OF OPENINGS

TYPE	WIDTH	HEIGHT	SILL HT.	LINTEL	TYPE	WIDTH	HEIGHT	SILL HT.	LINTEL
D1	750	2100	300	2100	FCD	2100	2100	–	2100
D2	1000	2100	–	2100	W1	3400	2470	900	3370
D3	1500	2100	–	2100	W2	9000	2470	900	3370
D4	2100	2100	–	2100	W3	2150	2100	600	1500

LEGEND FOR PLUMBING

1	110 OD SWR PVC SOIL & VENT PIPE
2	110 OD SWR PVC WASTE & VENT PIPE
3	D.W.S RISER PIPE
4	F.W.S RISER PIPE
5	160 OD uPVC RAIN WATER PIPE (FOR TERRACE)
6	110 OD uPVC RAIN WATER PIPE (FOR TERRACE)
7	DWS RISER TO O.H.T. FILLING
FT	FLOOR TRAP
FD	FLOOR DRAIN
UT	URINAL TRAP

PLUMBING NOTE:–
* WASH BASIN TO FLOOR TRAP 50 OD uPVC WASTE PIPE
* FLOOR DRAIN TO FLOOR TRAP 63 OD uPVC WASTE PIPE
* FLOOR TRAP TO VERTICAL WASTE STACK 110 OD WASTE PIPE
* W.C TO VERTICAL SOIL STACK 110 OD SOIL PIPE

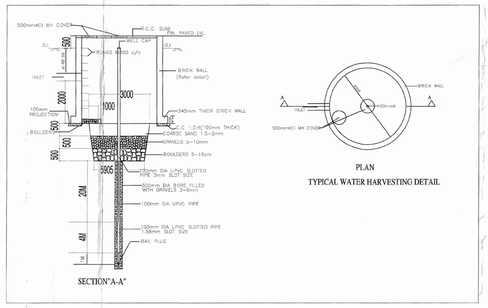

ROAD LAYOUT

LEGEND FOR PLUMBING

MH	SEWAGE MANHOLE
DMH	DRAINAGE MANHOLE
GH	GARDEN HYDRANT
——	DOMESTIC WATER SUPPLY
——	FLUSHING WATER SUPPLY

LEGEND FOR PLUMBING

3	DOMESTIC WATER SUPPLY DN. TAKE PIPE
4	FLUSHING WATER SUPPLY DN. TAKE PIPE
5	DOMESTIC WATER SUPPLY RISER PIPE
6	FLUSHING WATER SUPPLY RISER PIPE

GH	GARDEN HYDRANT
——	DOMESTIC WATER SUPPLY
——	FLUSHING WATER SUPPLY

LEGEND

YH	YARD HYDRANT

Architect (HQ) S.T.P. Member Secretary B.P.C. Member B.P.C. Member B.P.C.

DINESH KUMAR SO (HQ)

For Ameya Commercial Projects Pvt. Ltd. Authorised Signatory

DDT (HQ) Member BPAC

GIAN P. MATHUR ARCHITECT B.Arch., M.C.A. I.I.A. CA No. 80/5769

OWNER'S SIGN ARCHITECT'S SIGN

Approved and Board ok for Public Hearing (Internal) Service only subject to comments in the forwarding letter No. ACP(HQ) dt. 17/7/21

PROJECT:–
PROPOSED BUILDING PLAN OF COMMERCIAL COLONY AREA MEASURING 2.17969 ACRES (LICENCE NO. 25 DATED 04–06–2021)
IN SECTOR–82A, GURUGRAM BEING DEVELOPED BY SH.AJAY PAL S/O AZAD SINGH AND OTHERS IN COLLABORATION WITH AMEYA COMMERCIAL PROJECTS PVT. LTD.

TITLE:– SITE PLAN & AREA CALCULATION

DRG.NO.:– SB–A01/09

THIS DRAWING IS THE PROPERTY OF GIAN.P.MATHUR & ASSOC.(P) LTD AND SHALL NOT BE USED,COPIED OR REPRODUCED WITHOUT THEIR WRITTEN PERMISSION

GIAN P. MATHUR AND ASSOCIATES (P) LTD.
C - 55, East Of Kailash, New Delhi-110065
T : 46599599 I F 46599512
E : gpma@airtelmail.in I W : www.gpmindia.com

SCALE:– 1:200 DATE:–28/06/2021