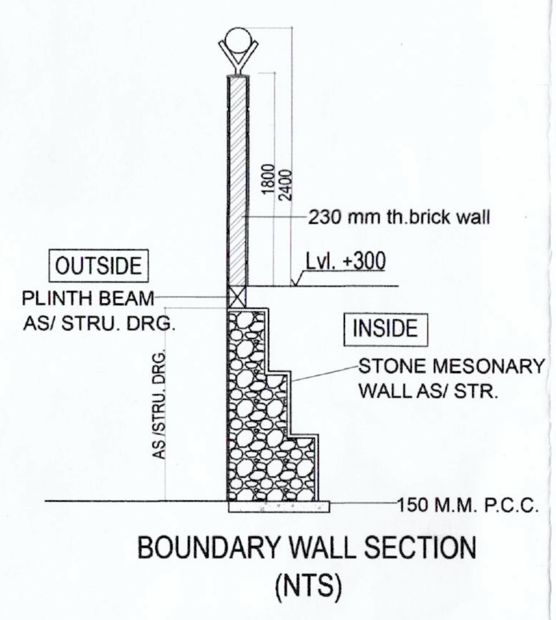

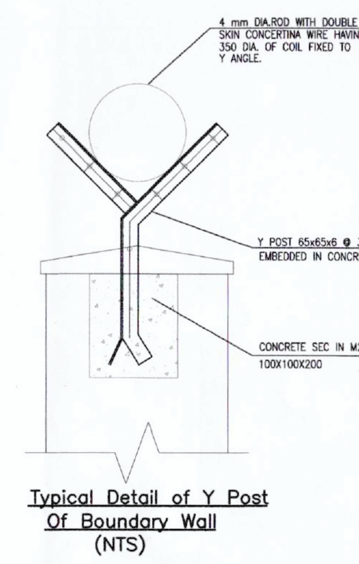

Residential Non - F.A.R. Chart (Area In Sq.m.)

Floors	Tower - 1	Tower - 2	Tower - 3	Tower - 4	Tower - 5	Tower - 6	Tower - 7	Tower - 8	Total
Stilt For Parking	518.500	518.500	95.893	455.733	518.500	518.500	477.598	497.922	3601.146
1st Floor	22.150	22.150	22.150	22.150	22.150	22.150	22.150	22.150	177.200
2nd Floor	22.150	22.150	22.150	22.150	22.150	22.150	22.150	22.150	177.200
3rd Floor	22.150	22.150	22.150	22.150	22.150	22.150	22.150	22.150	177.200
4th Floor	22.150	22.150	22.150	22.150	22.150	22.150	22.150	22.150	177.200
5th Floor	22.150	22.150	22.150	22.150	22.150	22.150	22.150	22.150	177.200
6th Floor	22.150	22.150	22.150	22.150	22.150	22.150	22.150	22.150	177.200
7th Floor	22.150	22.150	22.150	22.150	22.150	22.150	22.150	22.150	177.200
8th Floor	22.150	22.150	22.150	22.150	22.150	22.150	22.150	22.150	177.200
9th Floor	22.150	22.150	22.150	22.150	22.150	22.150	22.150	22.150	177.200
10th Floor	22.150	22.150	22.150	22.150	22.150	22.150	22.150	22.150	177.200
11th Floor	22.150	22.150	22.150	22.150	22.150	22.150	22.150	22.150	177.200
12th Floor	22.150	22.150	22.150	22.150	22.150	22.150	22.150	22.150	177.200
13th Floor	22.150	22.150	22.150	22.150	22.150	22.150	22.150	22.150	177.200
14th Floor	22.150	22.150	22.150	22.150	22.150	22.150	22.150	22.150	177.200
15th Floor	---	---	---	---	22.150	---	---	---	22.150
16th Floor	---	---	---	---	22.150	---	---	---	22.150
17th Floor	---	---	---	---	22.150	---	---	---	22.150
18th Floor	---	---	---	---	22.150	---	---	---	22.150
19th Floor	---	---	---	---	22.150	---	---	---	22.150
Terrace	110.427	110.427	99.881	99.881	110.427	110.427	99.881	110.427	851.778
Total	939.027	939.027	505.874	865.714	1049.777	939.027	887.579	918.449	7044.474

Residential F.A.R. Chart (Area In Sq.m.)

Floors	Tower - 1	Tower - 2	Tower - 3	Tower - 4	Tower - 5	Tower - 6	Tower - 7	Tower - 8	Total
Stilt Floor	45.608	45.608	45.608	45.608	45.608	45.608	45.608	45.608	364.864
1st Floor	530.265	530.265	470.257	468.050	530.265	530.265	489.915	510.090	4059.372
2nd Floor	530.265	530.265	470.257	468.050	530.265	530.265	489.915	510.090	4059.372
3rd Floor	530.265	530.265	470.257	468.050	530.265	530.265	489.915	510.090	4059.372
4th Floor	530.265	530.265	470.257	468.050	530.265	530.265	489.915	510.090	4059.372
5th Floor	530.265	530.265	470.257	468.050	530.265	530.265	489.915	510.090	4059.372
6th Floor	530.265	530.265	470.257	468.050	530.265	530.265	489.915	510.090	4059.372
7th Floor	530.265	530.265	470.257	468.050	530.265	530.265	489.915	510.090	4059.372
8th Floor	530.265	530.265	470.257	468.050	530.265	530.265	489.915	510.090	4059.372
9th Floor	530.265	530.265	470.257	468.050	530.265	530.265	489.915	510.090	4059.372
10th Floor	530.265	530.265	470.257	468.050	530.265	530.265	489.915	510.090	4059.372
11th Floor	530.265	530.265	470.257	468.050	530.265	530.265	489.915	510.090	4059.372
12th Floor	530.265	530.265	470.257	468.050	530.265	530.265	489.915	510.090	4059.372
13th Floor	530.265	530.265	470.257	468.050	530.265	530.265	489.915	510.090	4059.372
14th Floor	530.265	530.265	470.257	468.050	530.265	530.265	489.915	510.090	4059.372
15th Floor	---	---	---	---	530.265	---	---	---	530.265
16th Floor	---	---	---	---	530.265	---	---	---	530.265
17th Floor	---	---	---	---	530.265	---	---	---	530.265
18th Floor	---	---	---	---	530.265	---	---	---	530.265
19th Floor	---	---	---	---	530.265	---	---	---	530.265
Total	7469.318	7469.318	6629.206	6598.308	10120.643	7469.318	6904.418	7186.868	59847.397

Sr.n.	Particular	Area / Nos.	Units
1	**TOTAL PLOT AREA**	6.500	Acres
		26304.525	Sq.m.
2	REQUIRED GREEN AREA @15%	3945.679	Sq.m.
3	**PROPOSED GREEN AREA @15%**	3946.136	Sq.m.
4	PERMISSIBLE GROUND COVERAGE @50%	13152.263	Sq.m.
5	**PROPOSED GROUND COVERAGE @22.118%**	5818.040	Sq.m.
6	REQUIRED ANGANWADI AREA	185.810	Sq.m.
7	**PROPOSED ANGANWADI AREA**	194.962	Sq.m.
8	REQUIRED COMMUNITY AREA	185.810	Sq.m.
9	**PROPOSED COMMUNITY AREA**	188.850	Sq.m.
10	**RESIDENTIAL PLOT AREA @96% OF SITE AREA**	6.240	Acres
		25252.344	Sq.m.
11	PERMISSIBLE RESIDENTIAL F.A.R. @2.25	56817.774	Sq.m.
12	ADDITIONAL F.A.R. TAKEN FOR IGBC @0.12	3030.281	Sq.m.
13	TOTAL PERMISSIBLE RESIDENTIAL F.A.R. @2.37	59848.055	Sq.m.
14	**PROPOSED RESIDENTIAL F.A.R. @2.37**	59847.397	Sq.m.
15	PROPOSED RESIDENTIAL NON - F.A.R.	7044.474	Sq.m.
16	PERMISSIBLE MINIMUM DWELLING UNIT @750PPA	936	Nos.
17	PERMISSIBLE MAXIMUM DWELLING UNIT @900PPA	1123.2	Nos.
18	**PROPOSED DWELLING UNIT**	936	Nos.
19	**PROPOSED DENSITY (Total Unit x 5 Persons / Plot Area) (936 x 5 /6.24)**	750	PPA
20	REQUIRED E.C.S	468	Nos.
21	REQUIRED TWO WHEELER PARKING	936	Nos.
22	**PROPOSED MANDATORY E.C.S.**	468	Nos.
23	**PROPOSED MANDATORY TWO WHEELER PARKING**	937	Nos.
24	**PROPOSED ADDITIONAL CHARGEABLE E.C.S. AS PER NUMBERS**	230	Nos.
25	**PROPOSED ADDITIONAL CHARGEABLE E.C.S. AS PER AREA**	163	Nos.
26	**COMMERCIAL PLOT AREA @4% OF SITE AREA**	0.260	Acres
		1052.181	Sq.m.
27	PERMISSIBLE COMMERCIAL F.A.R. @1.75	1841.317	Sq.m.
28	ADDITIONAL F.A.R. TAKEN FOR IGBC @0.12	126.262	Sq.m.
29	TOTAL PERMISSIBLE COMMERCIAL F.A.R. @1.87	1967.578	Sq.m.
30	**PROPOSED COMMERCIAL F.A.R. @1.87**	1967.569	Sq.m.
31	PROPOSED COMMERCIAL NON - F.A.R.	91.275	Sq.m.
32	**TOTAL COVERED AREA = Sr.n. 7 + 9 + 14 + 15 + 30 + 31**	69334.527	Sq.m.

CALCULATION OF CARPET AREA (IN Sq.m.)

	TYPE	CARPET AREA	BALCONY AREA	Nos. OF UNITS	TOTAL CARPET AREA	TOTAL BALCONY AREA
i)	TYPE - A	59.997	9.308	272	16319.184	2531.776
iii)	TYPE - B	59.928	9.293	392	23491.776	3642.856
iv)	TYPE - B1	59.928	18.941	20	1198.560	378.820
v)	TYPE - C	50.622	9.301	182	9213.204	1692.782
vi)	TYPE - D	50.440	9.308	56	2824.640	521.248
vii)	TYPE - E	48.366	9.296	14	677.124	130.144
viii)	TOTAL			936	53724.488	8897.626

Bifurcation of Units

	Tower - 1 Type - A	Tower - 1 Type - B	Tower - 1 Total	Tower - 2 Type - A	Tower - 2 Type - B	Tower - 2 Total	Tower - 3 Type - B	Tower - 3 Type - C	Tower - 3 Type - D	Tower - 3 Total	Tower - 4 Type - B	Tower - 4 Type - C	Tower - 4 Type - D	Tower - 4 Type - E	Tower - 4 Total
1st Floor	4	4	8	4	4	8	2	4	2	8	2	3	2	1	8
2nd Floor	4	4	8	4	4	8	2	4	2	8	2	3	2	1	8
3rd Floor	4	4	8	4	4	8	2	4	2	8	2	3	2	1	8
4th Floor	4	4	8	4	4	8	2	4	2	8	2	3	2	1	8
5th Floor	4	4	8	4	4	8	2	4	2	8	2	3	2	1	8
6th Floor	4	4	8	4	4	8	2	4	2	8	2	3	2	1	8
7th Floor	4	4	8	4	4	8	2	4	2	8	2	3	2	1	8
8th Floor	4	4	8	4	4	8	2	4	2	8	2	3	2	1	8
9th Floor	4	4	8	4	4	8	2	4	2	8	2	3	2	1	8
10th Floor	4	4	8	4	4	8	2	4	2	8	2	3	2	1	8
11th Floor	4	4	8	4	4	8	2	4	2	8	2	3	2	1	8
12th Floor	4	4	8	4	4	8	2	4	2	8	2	3	2	1	8
13th Floor	4	4	8	4	4	8	2	4	2	8	2	3	2	1	8
14th Floor	4	4	8	4	4	8	2	4	2	8	2	3	2	1	8
Total	56	56	112	56	56	112	28	56	28	112	28	42	28	14	112

	Tower - 5 Type - A	Tower - 5 Type - B/B1	Tower - 5 Total	Tower - 6 Type - A	Tower - 6 Type - B	Tower - 6 Total	Tower - 7 Type - B	Tower - 7 Type - C	Tower - 7 Total	Tower - 8 Type - A	Tower - 8 Type - B	Tower - 8 Type - C	Tower - 8 Total	Total of Unit Type	
1st Floor	4	4	8	4	4	8	4	4	8	2	4	2	8		
2nd Floor	4	4	8	4	4	8	4	4	8	2	4	2	8		
3rd Floor	4	4	8	4	4	8	4	4	8	2	4	2	8	Type - A	272
4th Floor	4	4	8	4	4	8	4	4	8	2	4	2	8	Type - B	392
5th Floor	4	4	8	4	4	8	4	4	8	2	4	2	8	Type - B1	20
6th Floor	4	4	8	4	4	8	4	4	8	2	4	2	8	Type - C	182
7th Floor	4	4	8	4	4	8	4	4	8	2	4	2	8	Type - D	56
8th Floor	4	4	8	4	4	8	4	4	8	2	4	2	8	Type - E	14
9th Floor	4	4	8	4	4	8	4	4	8	2	4	2	8	Total	936
10th Floor	4	4	8	4	4	8	4	4	8	2	4	2	8		
11th Floor	4	4	8	4	4	8	4	4	8	2	4	2	8		
12th Floor	4	4	8	4	4	8	4	4	8	2	4	2	8		
13th Floor	4	4	8	4	4	8	4	4	8	2	4	2	8		
14th Floor	4	4	8	4	4	8	4	4	8	2	4	2	8		
15th Floor	4	4	8	---	---	---	---	---	---	---	---	---	---		
16th Floor	4	4	8	---	---	---	---	---	---	---	---	---	---		
17th Floor	4	4	8	---	---	---	---	---	---	---	---	---	---		
18th Floor	4	4	8	---	---	---	---	---	---	---	---	---	---		
19th Floor	4	4	8	---	---	---	---	---	---	---	---	---	---		
Total	76	76	152	56	56	112	56	56	112	28	56	28	112		

Total Commercial Area Calculation (Area in Sq.m.)	
Commercial Block - 1 F.A.R.	1311.121
Commercial Block - 2 F.A.R.	186.797
Commercial Block - 3 F.A.R.	469.655
Total F.A.R.	1967.573
Commercial Block - 1 Non - F.A.R.	58.695
Commercial Block - 3 Non - F.A.R.	32.58
Total Non - F.A.R.	91.275

Total Ground Coverage (Area In Sq.m.)	
Stilt Area of Tower - 1 (Including F.A.R. + Non F.A.R.)	564.108
Stilt Area of Tower - 2 (Including F.A.R. + Non F.A.R.)	564.108
Stilt Area of Tower - 3 (Including F.A.R. + Non F.A.R. + Aanganwadi + Community)	525.313
Stilt Area of Tower - 4 (Including F.A.R. + Non F.A.R.)	501.341
Stilt Area of Tower - 5 (Including F.A.R. + Non F.A.R.)	564.108
Stilt Area of Tower - 6 (Including F.A.R. + Non F.A.R.)	564.108
Stilt Area of Tower - 7 (Including F.A.R. + Non F.A.R.)	523.206
Stilt Area of Tower - 8 (Including F.A.R. + Non F.A.R.)	543.530
Ground Floor Area of Commercial Block - 1 (F.A.R.)	811.766
Ground Floor Area of Commercial Block - 2 (F.A.R.)	186.797
Ground Floor Area of Commercial Block - 3 (F.A.R.)	469.655
Total	5818.040

Note :- ALL GROUND FLOOR SHAFT ARE COUNTED IN GROUND COV. AREAS.
· Nos. of SHAFT (1) = 14 Nos.
Sizes of SHAFT (1) = 4.225 mt × 3.0 mt
Total AREA = 14 × 4.225 × 3.0 = 177.45 Sqmt.
Nos. of SHAFT (2) = 2 Nos.
Sizes of SHAFT (2) = 3.0 × 3.0 mt.
Total COV. AREA = 3.0 × 3.0 × 2 = 18.0 Sqmt.
Total SHAFT AREA = 177.45 + 18.0 Sqmt = 195.45 Sqmt
Total GROUND COV. AREA = 5821.869 Sqmt + 195.45 Sqmt
= 6017.319 Sqmt.

LEGEND

(red line)	SEWERAGE LINE 200 mmø SWP 150 mmø SWP
(blue line)	STORM WATER LINE 400 mmø RCC PIPE
(green line)	DOMESTIC WATER SUPPLY
- - - -	FLUSHING WATER SUPPLY
(MH)	SEWRAGE MANHOLE
(CH)	DRAINAGE MANHOLE
RWH	RAIN WATER HARVESTING PT
⊙	TUBE WELL

GENERAL NOTES:-
1. ALL DIMENSIONS & LEVELS ARE IN METERS.
2. ALL THE AREAS INDICATED ARE IN SQ.M.
3. COLUMNS ARE ONLY INDICATIVE AND WILL BE AS PER RELEVANT STRUCTURAL DRAWINGS.
4. RAIN WATER HARVESTING SYSTEM IS AS PER CENTRAL GROUND WATER AUTHORITY/HARYANA GOVERNMENT.
5. ALL LIFTS & MACHINE ROOMS ARE AS PER ISI STANDARD.

DRG. TITLE: SITE PLAN

PROJECT: PROPOSED BUILDING PLAN OF AFFORDABLE GROUP HOUSING COLONY OVER AN AREA MEASURING 6.50 ACRES (LICENSE No. 77 DATED : 24/09/2021) IN SECTOR - 88A, GURUGRAM BEING DEVELOPED BY FELDON DEVELOPERS PVT. LTD. & OTHERS IN COLLABORATION WITH GCC INFRA

Key Plan :

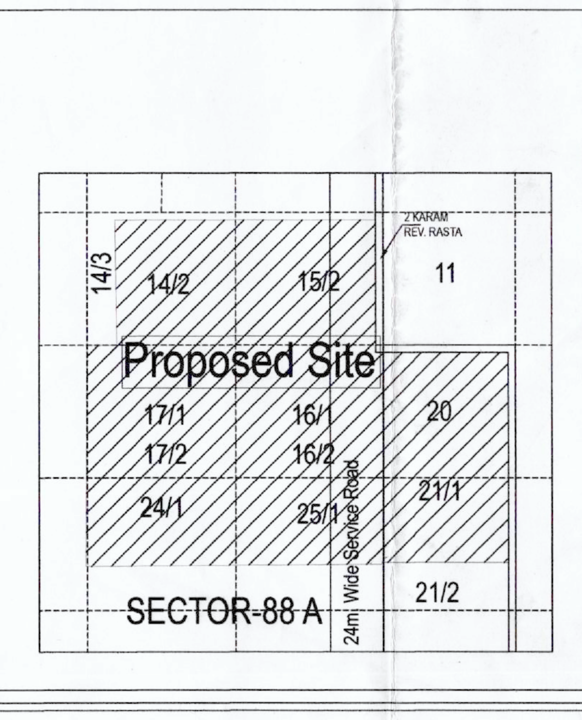

Architect's Signature	Developer's Signature
ARCHITECT NAVDEEP CA/98/20249 (stamp, signature)	For GCC INFRA Authorised Signatory

Checked and found ok for Public Health (Internal) Service only subject to comments in forwarding letter No. ACE(HQ) 2...
Additional Chief Engineer (HQ)

ARCHITECT: creative line
architects interior designers & planners
studio:2nd fl., shri hith plaza,c-25,sector-13,vasundhara, ghz.
phone: 0120 4208127, +91 9811132248
website: www.creativelinestudio.in, email: creativelinestudio2015@gmail.com

DATE	SCALE	NORTH
Dec.-2021	1:300	
DEALT BY	CHKD BY	DRG. NO.
VIKAS	NAVDEEP	01
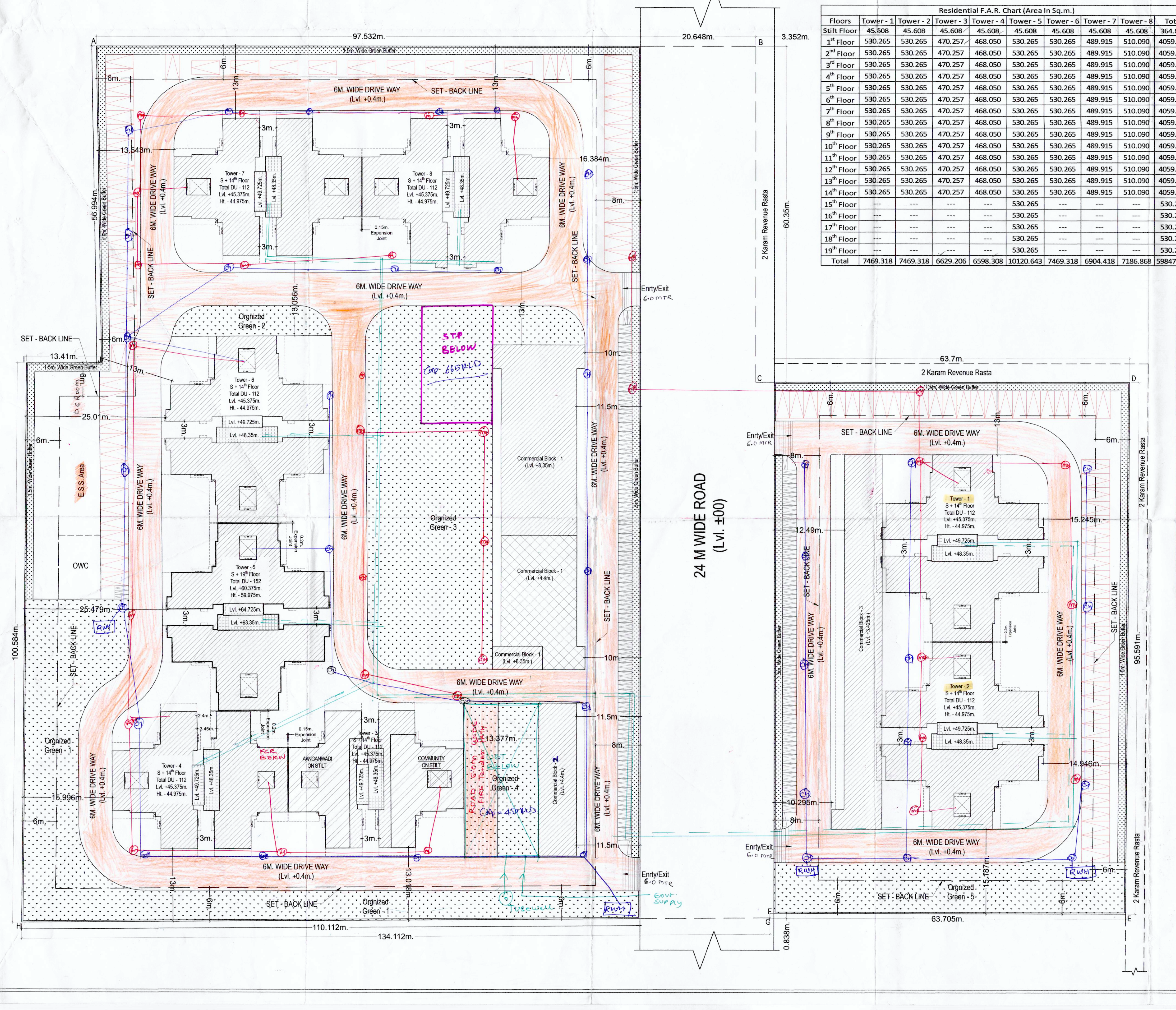
DINESH KUMAR SD (HQ)
ARCHITECT (H.Q.) S.T.P. Member Secretary B.P.C. Member B.P.C. Chairman B.P.C.
DDT (HQ) Member BPC
P.A. A.T.P.