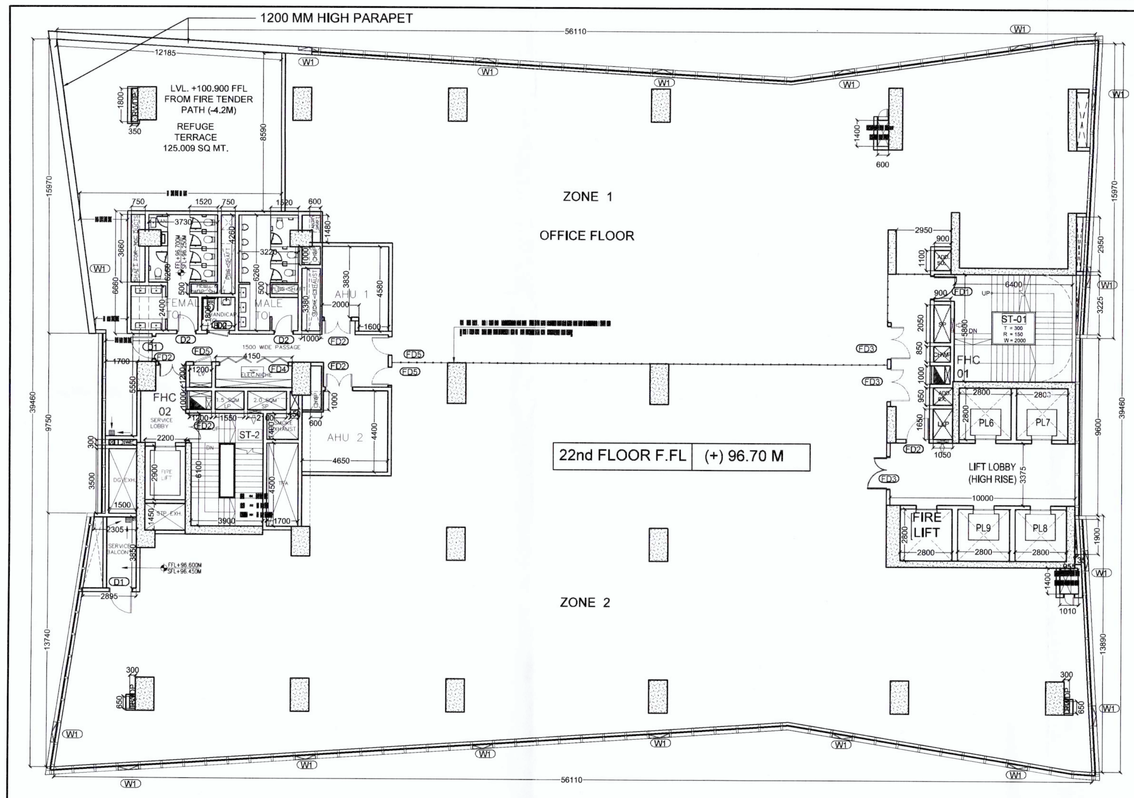

1 PLAN AT 22ND FLOOR
SCALE 1:150

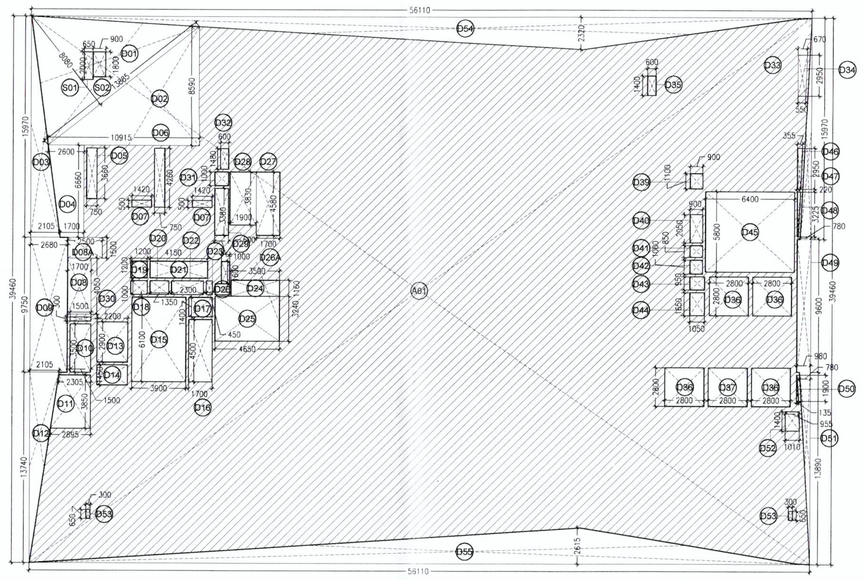

2 FAR AREA DIAGRAM
SCALE 1:200

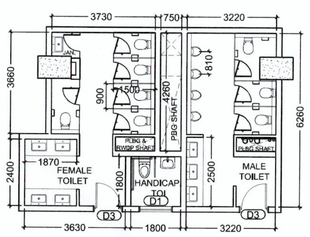

8 TYPICAL TOILET DETAIL
SCALE 1:100

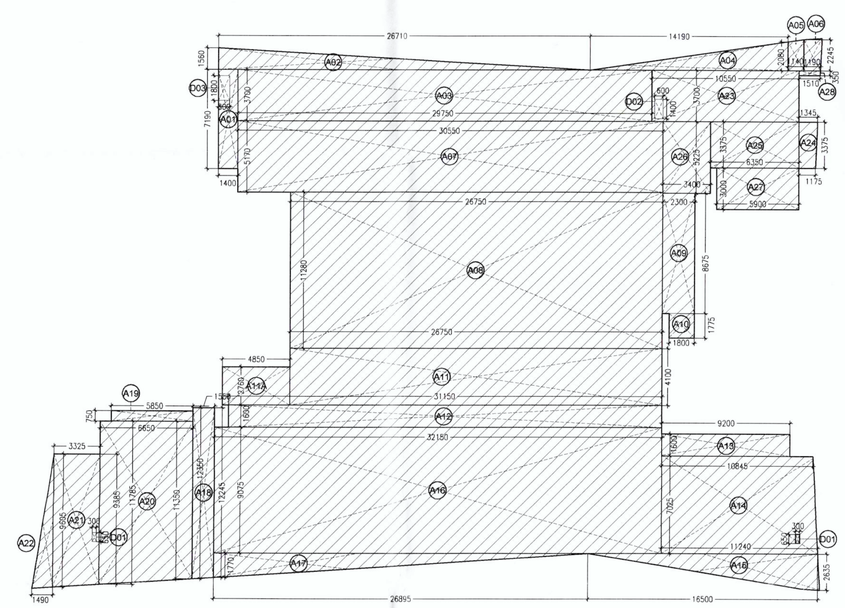

3 CARPET AREA DIAGRAM
SCALE 1:200

22nd FLOOR OFFICE AREA CALCULATION

22nd FLOOR OFFICE AREA = TOTAL ADDITION AREA - TOTAL DEDUCTION AREA

S.NO.	DESCRIPTION	QUANTITY	LENGTH A (M)	LENGTH B (M)	WIDTH/HT (M)	FORMULA	AREA (SQ.M.)
1	A1	1		56.110	39.460	Area Rectangle= L X B	2214.101
A	TOTAL AREA	ADDITION					2214.101

S.NO.	DESCRIPTION	QUANTITY	LENGTH A (M)	LENGTH B (M)	WIDTH/HT (M)	FORMULA	AREA (SQ.M.)
1	D01	1		13.885	8.080	Area Triangle= 1/2 X (Length X Width)	56.095
2	D02	1		10.915	8.590	Area Triangle= 1/2 X (Length X Width)	46.880
3	D03	1		2.105	15.970	Area Triangle = L X B X1/2	16.808
4	D04	1	2.600	1.700	6.660	Area Trapezium= (Sum of parallel side) X H/2	14.319
5	D05	1		0.750	3.660	Area Rectangle= L X B	2.745
6	D06	1		0.750	4.260	Area Rectangle= L X B	3.195
7	D07	2		1.420	0.590	Area Rectangle= L X B	1.420
8	D08	1		1.700	4.050	Area Rectangle= L X B	6.885
9	D08A	1		1.500	2.500	Area Rectangle= L X B	3.750
10	D09	1		2.680	9.750	Area Rectangle= L X B	26.130
11	D10	1		1.500	3.500	Area Rectangle= L X B	5.250
12	D11	1	2.305	2.895	3.850	Area Trapezium= (Sum of parallel side) X H/2	10.010
13	D12	1		2.105	13.740	Area Triangle= 1/2 X (Length X Width)	14.461
14	D13	1		2.200	2.900	Area Rectangle= L X B	6.380
15	D14	1		2.200	1.450	Area Rectangle= L X B	3.190
16	D15	1		3.900	6.100	Area Rectangle= L X B	23.790
17	D16	1		1.700	4.500	Area Rectangle= L X B	7.650
18	D17	1		1.700	1.400	Area Rectangle= L X B	2.380
19	D18	1		1.200	1.000	Area Rectangle= L X B	1.200
20	D19	1		1.200	1.200	Area Rectangle= L X B	1.440
21	D20	1		1.350	1.000	Area Rectangle= L X B	1.350
22	D21	1		4.150	1.200	Area Rectangle= L X B	4.980
23	D22	1		2.300	1.000	Area Rectangle= L X B	2.300
24	D23	1		1.000	0.450	Area Rectangle= L X B	0.450
25	D24	1		3.500	1.160	Area Rectangle= L X B	4.060
26	D25	1		3.240	4.650	Area Rectangle= L X B	15.066
27	D26	1		1.050	0.800	Area Rectangle= L X B	0.840
28	D26A	1		1.600	0.600	Area Rectangle= L X B	0.960
29	D27	1		1.700	4.580	Area Rectangle= L X B	7.786
30	D28	1		1.900	3.830	Area Rectangle= L X B	7.277
31	D29	1		1.000	3.380	Area Rectangle= L X B	3.380
32	D30	1		1.500	0.300	Area Rectangle= L X B	0.450
33	D31	1		1.000	1.000	Area Rectangle= L X B	1.000
34	D32	1		0.600	1.480	Area Rectangle= L X B	0.888
35	D34	1	0.550	0.670	2.950	Area Trapezium= (Sum of parallel side) X H/2	1.800
36	D35	1		0.600	1.400	Area Rectangle= L X B	0.840
37	D36	4		2.800	2.800	Area Rectangle= L X B	31.360
38	D37	1		2.800	2.800	Area Rectangle= L X B	7.840
39	D39	1		0.900	1.100	Area Rectangle= L X B	0.990
40	D40	1		0.900	2.050	Area Rectangle= L X B	1.845
41	D41	1		0.900	0.850	Area Rectangle= L X B	0.765
42	D42	1		0.900	1.000	Area Rectangle= L X B	0.900
43	D43	1		1.050	0.950	Area Rectangle= L X B	0.998
44	D44	1		1.050	1.650	Area Rectangle= L X B	1.733
45	D45	1		6.400	5.800	Area Rectangle= L X B	37.120
46	D46	1	0.220	0.355	2.950	Area Trapezium= (Sum of parallel side) X H/2	0.848
47	D47	1		15.970	0.780	Area Triangle = L X B X1/2	6.228
48	D48	1	0.070	0.215	3.225	Area Trapezium= (Sum of parallel side) X H/2	0.460
49	D49	1		0.780	9.600	Area Rectangle= L X B	7.488
50	D50	1		0.135	1.900	Area Triangle= 1/2 X (Length X Width)	0.128
51	D51	1		0.780	13.890	Area Triangle= 1/2 X (Length X Width)	5.417
52	D52	1	0.955	1.010	1.400	Area Trapezium= (Sum of parallel side) X H/2	1.376
53	D53	2		0.300	0.650	Area Rectangle= L X B	0.390
54	D54	1		2.320	56.110	Area Triangle= 1/2 X (Length X Width)	65.088
55	D55	1		2.615	56.110	Area Triangle= 1/2 X (Length X Width)	73.364
B	TOTAL AREA	DEDUCTION					551.742
C		22nd FLOOR OFFICE AREA FAR					1662.359

4 F.A.R. CALCULATION

22ND FLOOR OFFICE CARPET AREA CALCULATION

22ND FLOOR OFFICE AREA - TOTAL ADDITION AREA - TOTAL DEDUCTION AREA

S.NO.	DESCRIPTION	QUANTITY	LENGTH A (M)	LENGTH B (M)	WIDTH/HT (M)	FORMULA	AREA (SQ.M.)
1	A01	1		7.190	1.400	Area Rectangle= L X B	10.066
2	A02	1		26.710	1.560	Area Triangle= 1/2 X (Length X Width)	20.834
3	A03	1		3.700	29.750	Area Rectangle= L X B	110.075
4	A04	1		2.080	14.190	Area Triangle= 1/2 X (Length X Width)	14.758
5	A05	1	2.080	2.245	1.140	Area Trapezium= (Sum of parallel side) X H/2	2.465
6	A06	1	2.245	2.335	1.190	Area Trapezium= (Sum of parallel side) X H/2	2.840
7	A07	1		5.170	30.550	Area Rectangle= L X B	157.944
8	A08	1		26.750	11.280	Area Rectangle= L X B	301.740
9	A09	1		8.675	2.300	Area Rectangle= L X B	19.953
10	A10	1		1.800	1.775	Area Rectangle= L X B	3.195
11	A11	1		26.750	4.100	Area Rectangle= L X B	109.675
12	A11A	1		4.850	2.760	Area Rectangle= L X B	13.386
12	A12	1		31.150	1.600	Area Rectangle= L X B	49.840
13	A13	1		9.200	1.600	Area Rectangle= L X B	14.720
14	A14	1	10.845	11.240	7.025	Area Trapezium= (Sum of parallel side) X H/2	77.574
15	A15	1		16.500	2.635	Area Triangle= 1/2 X (Length X Width)	21.739
16	A16	1		32.150	9.075	Area Rectangle= L X B	291.761
17	A17	1		26.895	1.770	Area Triangle= 1/2 X (Length X Width)	23.802
18	A18	1	12.245	12.350	1.550	Area Trapezium= (Sum of parallel side) X H/2	19.061
19	A19	1		0.750	5.850	Area Rectangle= L X B	4.388
20	A20	1	11.785	11.350	6.650	Area Trapezium= (Sum of parallel side) X H/2	76.924
21	A21	1	9.385	9.605	3.325	Area Trapezium= (Sum of parallel side) X H/2	31.571
22	A22	1		1.490	9.605	Area Triangle= 1/2 X (Length X Width)	7.156
23	A23	1		10.550	3.700	Area Rectangle= L X B	39.035
24	A24	1	1.345	1.175	3.375	Area Trapezium= (Sum of parallel side) X H/2	4.253
25	A25	1		6.350	3.375	Area Rectangle= L X B	21.431
26	A26	1		5.225	3.400	Area Rectangle= L X B	17.765
27	A27	1		5.900	3.000	Area Rectangle= L X B	17.700
28	A28	1		1.510	0.350	Area Rectangle= L X B	0.529
A	TOTAL AREA	ADDITION					1486.177

S.NO.	DESCRIPTION	QUANTITY	LENGTH A (M)	LENGTH B (M)	WIDTH/HT (M)	FORMULA	AREA (SQ.M.)
1	D01	2		0.650	0.300	Area Rectangle= L X B	0.390
2	D02	1		1.400	0.600	Area Rectangle= L X B	0.840
3	D03	1		1.800	0.800	Area Rectangle= L X B	1.440
B	TOTAL AREA	DEDUCTION					2.670
C	22ND FLOOR OFFICE AREA CARPET						1483.507

5 CARPET AREA CALCULATION

22ND FLOOR OCCUPANT CALCULATION

OFFICE BUILDINGS - UNDER NATIONAL BUILDING CODE 2016

OFFICE AREA		1662.359	SQ.M.	NOTES
OCCUPANT LOAD		10	SQ.M/PERSON	
TOTAL POPULATION		166	PERSONS	For Occupant load, Ref. from NBC Part4, Fire & Life Safety, Table 03
MALE	60%	100		
FEMALE	40%	66		

22ND FLOOR TOILET CALCULATION

	REQUIRED		PROPOSED		NOTES
	MALE	FEMALE	MALE	FEMALE	
WC	5	5	4	4	For Toilet Requirements Ref. from NBC Part 9, Plumbing Services, Section 2, Table 1
WB	5	3	4	4	
UR	4	NA	4	NA	

HANDICAPED TOILET'S WC & WB ARE COUNTED IN MALE TOILET CALCULATION

7 TOILET CALCULATION

DOOR & WINDOW SCHEDULE

S.NO.	TYPE	WIDTH (MM)	HEIGHT (MM)	CILL(MM)	LINTEL(MM)	
1.	FD1	1250	2400	-	2400	FIRE DOOR
2	FD2	1500	2400	-	2400	FIRE DOOR
3.	FD3	1800	2400	-	2400	FIRE DOOR
4.	FD4	4200	2250	-	2250	FIRE DOOR
5.	FD5	1000	2250	-	2250	FIRE DOOR
6.	D1	1250	2400	-	2400	DOOR
7.	D2	1050	2400	-	2400	DOOR
8.	W1	1000	1000	1400	2400	OPENABLE WINDOW PANEL

REFUGE AREA CALCULATION AT 22th FLOOR (REQUIREMENT)

DESCRIPTION			AREA (SQ.M.)	
AREA ON 22ND FLOOR			2036.97	
AREA ON 23RD FLOOR			2036.97	
TOTAL			4073.94	
OCCUPANCY LOAD 1 PERS.@10SQ.M =		(GROSS AREA CURRENT FLOOR+GROSS	407.394	
REFUGE AREA REQUIRED @0.3 SQ.M. PER PERSON=0.9 SQ.M. =			124.0182	

REFUGE AREA CALCULATION (PROVIDED)

DESCRIPTION	QUANTITY	LENGTH A (M)	LENGTH B (M)	WIDTH/HT (M)	FORMULA	AREA (SQ.M.)	
D01	1		13.885	8.080	Area Triangle= 1/2 X (Length X Width)	56.095	FOR REFUGE AREA REF FROM NBC 2016,PART 4 SECTION 6.4.2.2
D02	1		10.915	8.590	Area Triangle= 1/2 X (Length X Width)	46.880	
D04	1	2.600	1.700	6.660	Area Trapezium= (Sum of parallel side) X H/2	14.319	
D08	1		1.700	4.050	Area Rectangle= L X B	6.885	
D08A	1		1.500	2.500	Area Rectangle= L X B	3.750	
TOTAL AREA		ADDITION				127.929	
S01	1		2.000	0.650	Area Rectangle= L X B	1.300	
S02	1		1.800	0.900	Area Rectangle= L X B	1.620	
TOTAL AREA		DEDUCTION				2.920	
TOTAL AREA		REFUGE				125.009	

6 REFUGE AREA CALCULATION

Architect(HQ) Member Secretary BPC; Member BPC; Chairman BPC; JD; PA; ATP

Rajesh Dutt
JD(HQ)

This is a " PROVISIONAL APPROVED BUILDING PLAN" only for purpose of hosting objection from the general public.

Architect (HQ)
Directorate of Town and Country Planning,
Haryana, Ch...

ARCHITECT:
DESIGN FORUM INTERNATIONAL
K-47, KAILASH COLONY
NEW DELHI-8
TEL : 011 - 46536600

STRUCTURE CONSULTANT:
VINTECH CONSULTANTS
C 35, PANPOSH ENCLAVE, GREATER KAILASH II,
NEW DELHI, DELHI 110048
Tel :011 4314 1516

MEP CONSULTANT:
SANELAC CONSULTANTS PVT LTD
C-64/2, Okhla Industrial Area, Phase-II,
New Delhi-110020
Tel : 26385316, 40503959

NOTES:
1. ALL DIMENSIONS ARE IN MM.
2. GATE AND BOUNDARY WALL SHALL BE AS PER STANDARD DESIGN.
3. SPRINKLERS WILL BE PROVIDED IN ENTIRE BUILDING INCLUDING BASEMENTS AS PER N.B.C.
4. RAIN WATER HARVESTING SYSTEM WILL BE PROVIDED AS PER APPLICABLE NORMS.
5. 100% POWER BACK UP WILL BE PROVIDED FOR LIFTS & ESSENTIAL SERVICE AREAS.
6. DISABLED RAMP @ 1:12 SLOPE WITH 900MM HIGH RAILING.
7. ALL BUILDINGS ARE MECHANICALLY VENTILATED AND FULLY AIR CONDITIONED.

PROJECT:
BUILDING PLAN OF COMMERCIAL COLONY MEASURING 4.418 ACRES (LICENCE NO. 197 OF 2008 DATED 05-12-2008) IN SECTOR 66, GURGAON MANESAR URBAN COMPLEX, BEING DEVELOPED BY M/S R. C. SOOD & CO.
C/O ADVANCE INDIA PROJECTS LIMITED,
THE MASTERPIECE. GOLF COURSE ROAD,
SECTOR 54, GURUGRAM - 122002, HARYANA, INDIA

ARCHITECT'S SIGNATURE:

Abhishek Jain
B. Arch.

CLIENT'S SIGNATURE:

For R. C. Sood & Co. Pvt. Ltd. C/o Advance India Projects Limited

Authorised Signatory

DRAWING TITLE:
22ND FLOOR PLAN

DRAWING NO:
33.A

NORTH:

SCALE:
AS MENTION

DATE:
10/02/2020