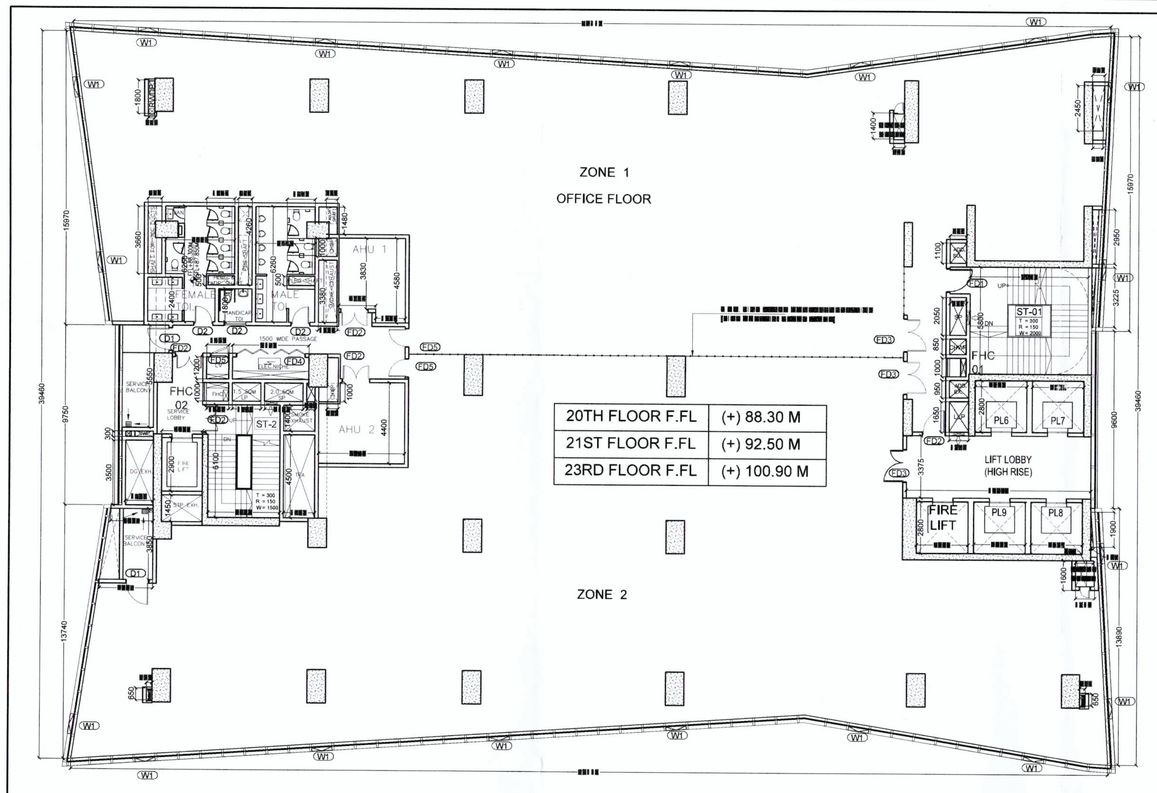


1 20TH, 21ST, 23RD FLOOR PLAN
SCALE 1:150

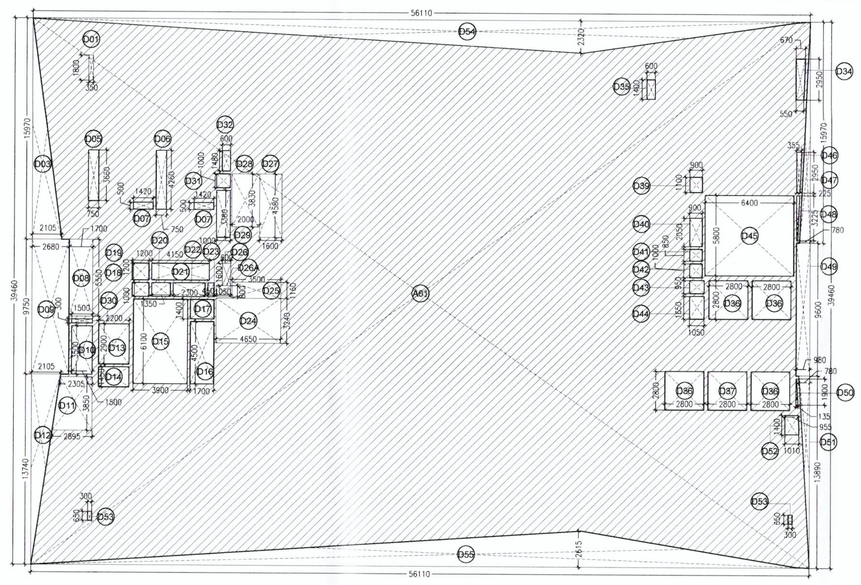

2 FAR AREA DIAGRAM
SCALE 1:250

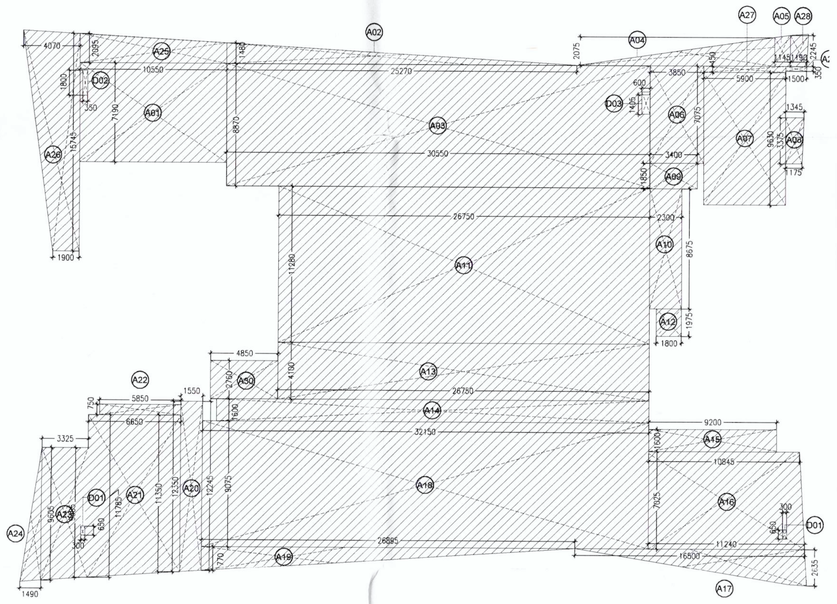

3 CARPET AREA DIAGRAM
SCALE 1:250

**20th,21st,23rd FLOOR OFFICE AREA CALCULATION**

20th,21st,23rd FLOOR OFFICE AREA = TOTAL ADDITION AREA - TOTAL DEDUCTION AREA

| S.NO. | DESCRIPTION | QUANTITY | LENGTH A (M) | LENGTH B (M) | WIDTH/HT (M) | FORMULA | AREA (SQ.M.) |
|---|---|---|---|---|---|---|---|
| 1 | A1 | 1 | | 56.110 | 39.460 | Area Rectangle= L X B | 2214.101 |
| A | TOTAL AREA | ADDITION | | | | | 2214.101 |

| S.NO. | DESCRIPTION | QUANTITY | LENGTH A (M) | LENGTH B (M) | WIDTH/HT (M) | FORMULA | AREA (SQ.M.) |
|---|---|---|---|---|---|---|---|
| 1 | D01 | 1 | | 1.800 | 0.350 | Area Rectangle= L X B | 0.630 |
| 2 | D03 | 1 | | 2.105 | 15.970 | rea Triangle = L X B X1/ | 16.808 |
| 3 | D05 | 1 | | 0.750 | 3.660 | Area Rectangle= L X B | 2.745 |
| 4 | D06 | 1 | | 0.750 | 4.260 | Area Rectangle= L X B | 3.195 |
| 5 | D07 | 2 | | 1.420 | 0.500 | Area Rectangle= L X B | 1.420 |
| 6 | D08 | 1 | | 1.700 | 5.500 | Area Rectangle= L X B | 9.350 |
| 7 | D09 | 1 | | 2.680 | 9.750 | Area Rectangle= L X B | 26.130 |
| 8 | D10 | 1 | | 1.500 | 3.500 | Area Rectangle= L X B | 5.250 |
| 9 | D11 | 1 | 2.305 | 2.850 | 3.850 | Area Trapezium= (Sum of parallel side ) X H/2 | 9.923 |
| 10 | D12 | 1 | | 2.105 | 13.740 | Area Triangle= 1/2 X (Length X Width ) | 14.461 |
| 11 | D13 | 1 | | 2.200 | 2.900 | Area Rectangle= L X B | 6.380 |
| 12 | D14 | 1 | | 2.200 | 1.450 | Area Rectangle= L X B | 3.190 |
| 13 | D15 | 1 | | 3.900 | 6.100 | Area Rectangle= L X B | 23.790 |
| 14 | D16 | 1 | | 1.700 | 4.500 | Area Rectangle= L X B | 7.650 |
| 15 | D17 | 1 | | 1.700 | 1.400 | Area Rectangle= L X B | 2.380 |
| 16 | D18 | 1 | | 1.200 | 1.000 | Area Rectangle= L X B | 1.200 |
| 17 | D19 | 1 | | 1.200 | 1.200 | Area Rectangle= L X B | 1.440 |
| 18 | D20 | 1 | | 1.350 | 1.000 | Area Rectangle= L X B | 1.350 |
| 19 | D21 | 1 | | 4.150 | 1.200 | Area Rectangle= L X B | 4.980 |
| 20 | D22 | 1 | | 2.300 | 1.000 | Area Rectangle= L X B | 2.300 |
| 21 | D23 | 1 | | 1.000 | 0.445 | Area Rectangle= L X B | 0.445 |
| 22 | D24 | 1 | | 4.650 | 3.240 | Area Rectangle= L X B | 15.066 |
| 23 | D25 | 1 | | 3.500 | 1.160 | Area Rectangle= L X B | 4.060 |
| 24 | D26 | 1 | | 1.600 | 0.600 | Area Rectangle= L X B | 0.960 |
| 25 | D26A | 1 | | 1.050 | 0.800 | Area Rectangle= L X B | 0.840 |
| 26 | D27 | 1 | | 1.600 | 4.580 | Area Rectangle= L X B | 7.328 |
| 27 | D28 | 1 | | 2.000 | 3.830 | Area Rectangle= L X B | 7.660 |
| 28 | D29 | 1 | | 1.000 | 3.380 | Area Rectangle= L X B | 3.380 |
| 29 | D30 | 1 | | 1.500 | 0.300 | Area Rectangle= L X B | 0.450 |
| 30 | D31 | 1 | | 1.000 | 1.000 | Area Rectangle= L X B | 1.000 |
| 31 | D32 | 1 | | 0.600 | 1.480 | Area Rectangle= L X B | 0.888 |
| 32 | D34 | 1 | 0.550 | 0.670 | 2.950 | Area Trapezium= (Sum of parallel side ) X H/2 | 1.800 |
| 33 | D35 | 1 | | 0.600 | 1.400 | Area Rectangle= L X B | 0.840 |
| 34 | D36 | 4 | | 2.800 | 2.800 | Area Rectangle= L X B | 31.360 |
| 35 | D37 | 1 | | 2.800 | 2.800 | Area Rectangle= L X B | 7.840 |
| 36 | D39 | 1 | | 0.900 | 1.100 | Area Rectangle= L X B | 0.990 |
| 37 | D40 | 1 | | 0.900 | 2.050 | Area Rectangle= L X B | 1.845 |
| 38 | D41 | 1 | | 0.900 | 0.850 | Area Rectangle= L X B | 0.765 |
| 39 | D42 | 1 | | 0.900 | 1.000 | Area Rectangle= L X B | 0.900 |
| 40 | D43 | 1 | | 1.050 | 0.950 | Area Rectangle= L X B | 0.998 |
| 41 | D44 | 1 | | 1.050 | 1.650 | Area Rectangle= L X B | 1.733 |
| 42 | D45 | 1 | | 6.400 | 5.800 | Area Rectangle= L X B | 37.120 |
| 43 | D46 | 1 | 0.255 | 0.355 | 2.950 | Area Trapezium= (Sum of parallel side ) X H/2 | 0.900 |
| 44 | D47 | 1 | | 15.970 | 0.780 | Area Triangle= 1/2 X (Length X Width ) | 6.228 |
| 45 | D48 | 1 | | 0.220 | 3.225 | Area Triangle= 1/2 X (Length X Width ) | 0.355 |
| 46 | D49 | 1 | | 0.980 | 9.600 | Area Rectangle= L X B | 9.408 |
| 47 | D50 | 1 | | 0.135 | 1.900 | Area Triangle= 1/2 X (Length X Width ) | 0.128 |
| 48 | D51 | 1 | | 0.780 | 13.890 | Area Triangle= 1/2 X (Length X Width ) | 5.417 |
| 49 | D52 | 1 | | 1.010 | 1.400 | Area Rectangle= L X B | 1.414 |
| 50 | D53 | 2 | | 0.300 | 0.650 | Area Rectangle= L X B | 0.390 |
| 51 | D54 | 1 | | 2.320 | 56.110 | Area Triangle= 1/2 X (Length X Width ) | 65.088 |
| 52 | D55 | 1 | | 2.615 | 56.110 | Area Triangle= 1/2 X (Length X Width ) | 73.364 |
| B | TOTAL AREA | DEDUCTION | | | | | 435.531 |
| C | 20th,21st,23rd FLOOR OFFICE AREA FAR | | | | | | 1778.569 |

4 F.A.R. CALCULATION

**20th,21st,23rd FLOOR CARPET AREA CALCULATION**

20th,21st,23rd FLOOR CARPET AREA = TOTAL ADDITION AREA - TOTAL DEDUCTION AREA

| S.NO. | DESCRIPTION | QUANTITY | LENGTH A (M) | LENGTH B (M) | WIDTH/HT (M) | FORMULA | AREA (SQ.M.) |
|---|---|---|---|---|---|---|---|
| 1 | A1 | 1 | | 10.550 | 7.190 | Area Rectangle= L X B | 75.855 |
| 2 | A2 | 1 | | 25.270 | 1.480 | Area Triangle= 1/2 X (Length X Width ) | 18.700 |
| 3 | A3 | 1 | | 8.870 | 30.550 | Area Rectangle= L X B | 270.979 |
| 4 | A4 | 1 | | 14.215 | 2.080 | Area Triangle= 1/2 X (Length X Width ) | 14.784 |
| 5 | A5 | 1 | 2.075 | 2.245 | 1.145 | Area Trapezium= (Sum of parallel side ) X H/2 | 2.473 |
| 6 | A6 | 1 | | 3.850 | 7.075 | Area Rectangle= L X B | 27.239 |
| 7 | A7 | 1 | | 5.900 | 9.625 | Area Rectangle= L X B | 56.788 |
| 8 | A8 | 1 | 1.175 | 1.345 | 3.375 | Area Trapezium= (Sum of parallel side ) X H/2 | 4.253 |
| 9 | A9 | 1 | | 3.400 | 1.850 | Area Rectangle= L X B | 6.290 |
| 10 | A10 | 1 | | 2.300 | 8.675 | Area Rectangle= L X B | 19.953 |
| 11 | A11 | 1 | | 26.750 | 11.280 | Area Rectangle= L X B | 301.740 |
| 12 | A12 | 1 | | 1.800 | 1.975 | Area Rectangle= L X B | 3.555 |
| 13 | A13 | 1 | | 26.750 | 4.100 | Area Rectangle= L X B | 109.675 |
| 14 | A14 | 1 | | 31.315 | 1.600 | Area Rectangle= L X B | 50.104 |
| 15 | A15 | 1 | | 9.200 | 1.600 | Area Rectangle= L X B | 14.720 |
| 16 | A16 | 1 | 10.845 | 11.240 | 7.025 | Area Trapezium= (Sum of parallel side ) X H/2 | 77.574 |
| 17 | A17 | 1 | | 16.500 | 2.635 | Area Triangle= 1/2 X (Length X Width ) | 21.739 |
| 18 | A18 | 1 | | 32.150 | 9.075 | Area Rectangle= L X B | 291.761 |
| 19 | A19 | 1 | | 26.895 | 1.770 | Area Triangle= 1/2 X (Length X Width ) | 23.802 |
| 20 | A20 | 1 | 12.350 | 12.245 | 1.550 | Area Trapezium= (Sum of parallel side ) X H/2 | 19.061 |
| 21 | A21 | 1 | 11.350 | 11.785 | 6.650 | Area Trapezium= (Sum of parallel side ) X H/2 | 76.924 |
| 22 | A22 | 1 | | 5.850 | 0.750 | Area Rectangle= L X B | 4.388 |
| 23 | A23 | 1 | 9.605 | 9.985 | 3.325 | Area Trapezium= (Sum of parallel side ) X H/2 | 32.568 |
| 24 | A24 | 1 | | 1.490 | 9.605 | Area Triangle= 1/2 X (Length X Width ) | 7.156 |
| 25 | A25 | 1 | 1.480 | 2.095 | 10.550 | Area Trapezium= (Sum of parallel side ) X H/2 | 18.858 |
| 25 | A26 | 1 | 1.900 | 4.070 | 15.745 | Area Trapezium= (Sum of parallel side ) X H/2 | 46.999 |
| 26 | A27 | 1 | | 5.900 | 0.450 | Area Rectangle= L X B | 2.655 |
| 27 | A28 | 1 | 2.245 | 2.335 | 1.190 | Area Trapezium= (Sum of parallel side ) X H/2 | 2.830 |
| 28 | A29 | 1 | | 1.500 | 0.350 | Area Rectangle= L X B | 0.525 |
| 29 | A30 | 1 | | 4.850 | 2.760 | Area Rectangle= L X B | 13.386 |
| TOTAL AREA | | ADDITION | | | | | 1617.330 |

| S.NO. | DESCRIPTION | QUANTITY | LENGTH A (M) | LENGTH B (M) | WIDTH/HT (M) | FORMULA | AREA (SQ.M.) |
|---|---|---|---|---|---|---|---|
| 1 | D1 | 2 | | 0.650 | 0.300 | Area Rectangle= L X B | 0.390 |
| 2 | D2 | 1 | | 1.800 | 0.350 | Area Rectangle= L X B | 0.630 |
| 3 | D3 | 1 | | 1.400 | 0.600 | Area Rectangle= L X B | 0.840 |
| TOTAL AREA | | DEDUCTION | | | | | 1.860 |
| 20th,21th,23th FLOOR CARPET AREA | | | | | | | 1615.470 |

5 CARPET AREA CALCULATION

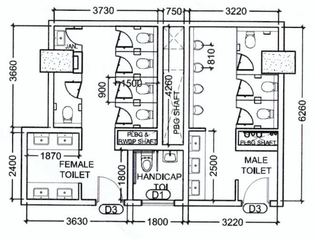


07 TYPICAL TOILET DETAIL
SCALE 1:100

**20th,21st,23rd FLOOR OFFICE OCCUPANT CALCULATION**

OFFICE BUILDINGS - UNDER NATIONAL BUILDING CODE 2016

| | | | | NOTES |
|---|---|---|---|---|
| OFFICE AREA | | 1778.569 | SQ.M. | For Occupant load, Ref. from NBC Part4, Fire & Life Safety, Table 03 |
| OCCUPANT LOAD | | 10 | SQ.M/PERSON | |
| TOTAL POPULATION | | 178 | PERSONS | |
| MALE | 60% | 107 | | |
| FEMALE | 40% | 71 | | |

**20th,21st,23rd FLOOR OFFICE AREA TOILET CALCULATION**

| | REQUIRED | | REQUIRED | | NOTES |
|---|---|---|---|---|---|
| | MALE | FEMALE | MALE | FEMALE | For Toilet Requirements Ref. from NBC Part 9, Plumbing, Services, Section 2, Table 1 |
| WC | 5 | 5 | 4 | 5 | |
| WB | 5 | 3 | 4 | 4 | |
| UR | 4 | NA | 4 | NA | |
| HANDICAPED TOILETS WC & WB ARE COUNTED IN MALE TOILET CALCULATION | | | | | |

6 TOILET CALCULATION

**DOOR & WINDOW SCHEDULE**

| S.NO. | TYPE | WIDTH (MM) | HEIGHT (MM) | CILL(MM) | LINTEL(MM) | |
|---|---|---|---|---|---|---|
| 1. | FD1 | 1250 | 2400 | - | 2400 | FIRE DOOR |
| 2 | FD2 | 1500 | 2400 | - | 2400 | FIRE DOOR |
| 3. | FD3 | 1800 | 2400 | - | 2400 | FIRE DOOR |
| 4. | FD4 | 4200 | 2250 | - | 2250 | FIRE DOOR |
| 5. | FD5 | 1000 | 2250 | - | 2250 | FIRE DOOR |
| 6. | D1 | 1250 | 2400 | - | 2400 | DOOR |
| 7. | D2 | 1050 | 2400 | - | 2400 | DOOR |
| 8. | W1 | 1000 | 1000 | 1400 | 2400 | OPENABLE WINDOW PANEL |

ARCHITECT(HQ) Member Secretary B.P.C; S.T.P.(G) Member B.P.C; C.T.P. Chairman B.P.C; JD; PA; ATP

Rajesh Dutt
JD(HQ)

This is a " PROVISIONAL APPROVED BUILDING PLAN" only for purpose of inviting objection from the general public

Architect (HQ)
Directorate of Town and Country Planning,
Haryana, Chandigarh

ARCHITECT:
**DESIGN FORUM INTERNATIONAL**
K-47, KAILASH COLONY
NEW DELHI
TEL : 011 - 46556600

STRUCTURE CONSULTANT:
**VINTECH CONSULTANTS**
C-39, PANPOSH ENCLAVE, GREATER KAILASH II,
NEW DELHI, DELHI 110048
Tel:011 4314 1516

MEP CONSULTANT:
**SANELAC CONSULTANTS PVT LTD**
C-64/2, Okhla Industrial Area, Phase-II
New Delhi-110020
Tel : 26385316, 40503659

NOTES:
1. ALL DIMENSIONS ARE IN MM.
2. GATE AND BOUNDARY WALL SHALL BE AS PER STANDARD DESIGN.
3. SPRINKLERS WILL BE PROVIDED IN ENTIRE BUILDING INCLUDING BASEMENTS AS PER N.B.C.
4. RAIN WATER HARVESTING SYSTEM WILL BE PROVIDED AS PER APPLICABLE NORMS.
5. 100% POWER BACK UP WILL BE PROVIDED FOR LIFTS & ESSENTIAL SERVICE AREAS.
6. DISABLED RAMP @ 1:12 SLOPE WITH 900MM HIGH RAILING.
7. ALL BUILDINGS ARE MECHANICALLY VENTILATED AND FULLY AIR CONDITIONED.

PROJECT:
BUILDING PLAN OF COMMERCIAL COLONY MEASURING 4.418 ACRES (LICENCE NO. 197 OF 2008 DATED 05-12-2008) IN SECTOR 66, GURGAON MANESAR URBAN COMPLEX, BEING DEVELOPED BY M/S R. C. SOOD & CO. C/O ADVANCE INDIA PROJECTS LIMITED, THE MASTERPIECE, GOLF COURSE ROAD, SECTOR 54, GURUGRAM - 122002, HARYANA, INDIA

ARCHITECT'S SIGNATURE:

Abhishek Jain
B. Arch.
CA/2019/[illegible]

CLIENT'S SIGNATURE:

For R. C. Sood & Co. Pvt. Ltd. C/o Advance India Projects Limited
Authorised Signatory

DRAWING TITLE:
20TH,21ST,23RD FLOOR PLAN

DRAWING NO:
32.A

NORTH:

SCALE:
AS MENTION

DATE:
10/02/2020