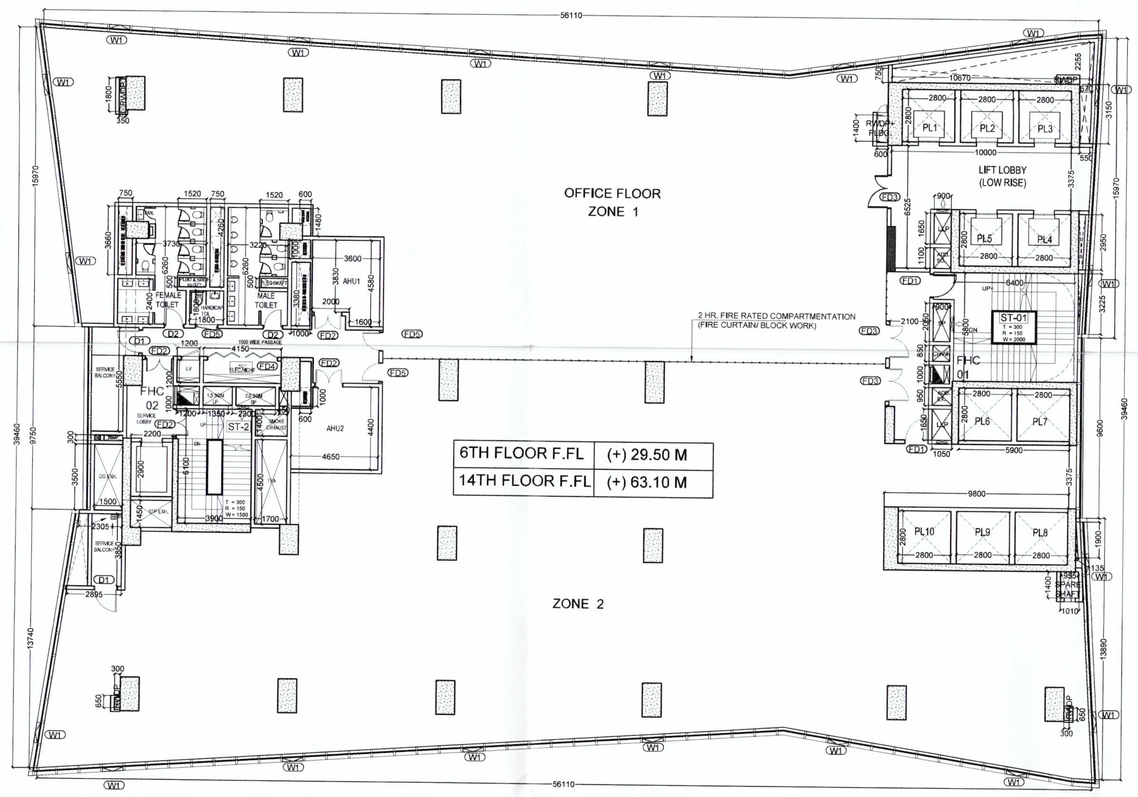

1 LVL 06TH,14TH OFFICE FLOOR PLAN
SCALE 1:150

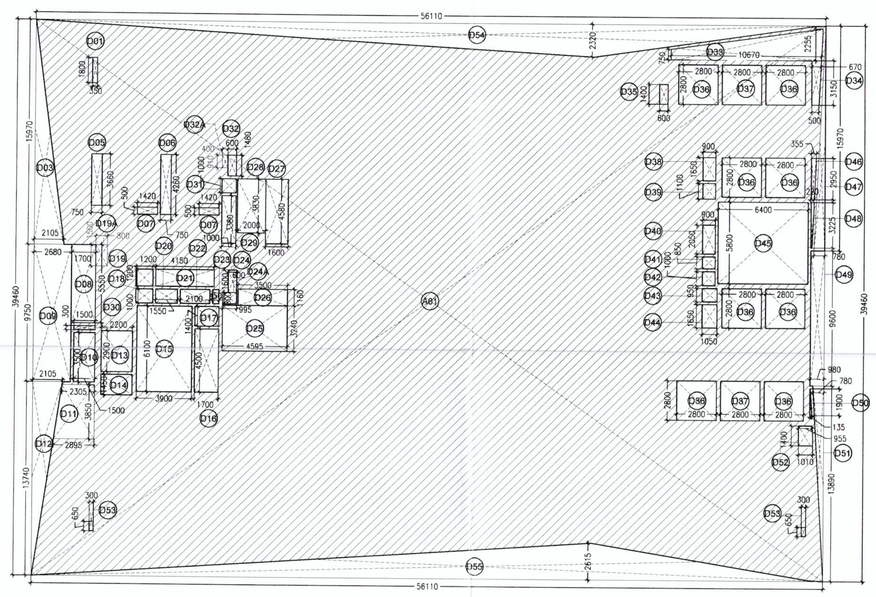

2 FAR AREA DIAGRAM
SCALE 1:200

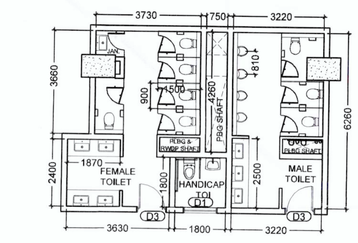

4 TYPICAL TOILET DETAIL
SCALE 1:100

DOOR & WINDOW SCHEDULE						
S.NO.	TYPE	WIDTH (MM)	HEIGHT (MM)	CILL(MM)	LINTEL(MM)	
1.	FD1	1250	2400	-	2400	FIRE DOOR
2	FD2	1500	2400	-	2400	FIRE DOOR
3.	FD3	1800	2400	-	2400	FIRE DOOR
4.	FD4	4200	2250	-	2250	FIRE DOOR
5.	FD5	1000	2250	-	2400	FIRE DOOR
6.	D1	1250	2400	-	2400	DOOR
7.	D2	1050	2400	-	2400	DOOR
8.	W1	1000	1000	1400	2400	OPENABLE WINDOW PANEL

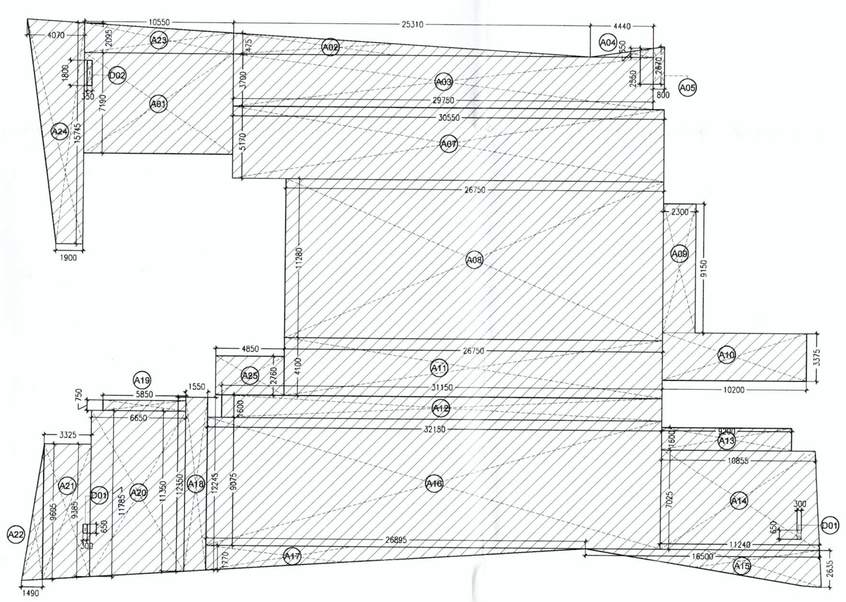

3 CARPET AREA DIAGRAM
SCALE 1:200

6th & 14TH FLOOR OFFICE OCCUPANT CALCULATION			
OFFICE BUILDINGS - UNDER NATIONAL BUILDING CODE 2016			
OFFICE AREA	1721.426	SQ.M.	NOTES
OCCUPANT LOAD	10	SQM/PERSON	For Occupant load, Ref. from NBC Part4, Fire & Life Safety, Table 03
TOTAL POPULATION	172	PERSONS	
MALE 60%	103		
FEMALE 40%	69		

6TH & 14TH FLOOR OFFICE TOILET CALCULATION					
	REQUIRED		PROPOSED		NOTES
	MALE	FEMALE	MALE	FEMALE	
WC	5	5	4	5	For Toilet Requirements Ref. from NBC Part 9 , Plumbing, Services, Section 2, Table 1
WB	5	3	4	4	
UR	4	NA	4	NA	
HANDICAPED TOILETS WC & WB ARE COUNTED IN MALE TOILET CALCULATION					

6th & 14TH FLOOR OFFICE AREA CALCULATION							
6TH & 14TH FLOOR OFFICE AREA = TOTAL ADDITION AREA - TOTAL DEDUCTION AREA							
S.NO.	DESCRIPTION	QUANTITY	LENGTH A (M)	LENGTH B (M)	WIDTH/HT (M)	FORMULA	AREA (SQ.M.)
1	A1	1		56.110	39.460	Area Rectangle= L X B	2214.101
A	TOTAL AREA	ADDITION					2214.101
S.NO.	DESCRIPTION	QUANTITY	LENGTH A (M)	LENGTH B (M)	WIDTH/HT (M)	FORMULA	AREA (SQ.M.)
1	D01	1		1.800	0.350	Area Rectangle= L X B	0.630
2	D03	1		2.130	15.970	Area Triangle = L X B X1/2	17.008
3	D05	1		0.750	3.660	Area Rectangle= L X B	2.745
4	D06	1		0.750	4.260	Area Rectangle= L X B	3.195
5	D07	2		1.420	0.500	Area Rectangle= L X B	1.420
6	D08	1		1.700	5.500	Area Rectangle= L X B	9.350
7	D09	1		2.680	9.750	Area Rectangle= L X B	26.130
8	D10	1		1.500	3.500	Area Rectangle= L X B	5.250
9	D11	1	2.305	2.850	3.850	Area Trapezium= (Sum of parallel side) X H/2	9.923
10	D12	1		2.105	13.740	Area Triangle= 1/2 X (Length X Width)	14.461
11	D13	1		2.200	2.900	Area Rectangle= L X B	6.380
12	D14	1		2.200	1.450	Area Rectangle= L X B	3.190
13	D15	1		3.900	6.100	Area Rectangle= L X B	23.790
14	D16	1		1.700	4.500	Area Rectangle= L X B	7.650
15	D17	1		1.700	1.400	Area Rectangle= L X B	2.380
16	D18	1		1.200	1.000	Area Rectangle= L X B	1.200
17	D19	1		1.200	1.200	Area Rectangle= L X B	1.440
	D19A	1		0.800	1.500	Area Rectangle= L X B	1.200
18	D20	1		1.550	1.000	Area Rectangle= L X B	1.550
19	D21	1		4.150	1.200	Area Rectangle= L X B	4.980
20	D22	1		2.100	1.000	Area Rectangle= L X B	2.100
21	D23	1		1.000	0.445	Area Rectangle= L X B	0.445
22	D24	1		1.600	0.600	Area Rectangle= L X B	0.960
23	D24A	1		0.995	0.800	Area Rectangle= L X B	0.796
24	D25	1		4.595	3.240	Area Rectangle= L X B	14.888
25	D26	1		3.500	1.160	Area Rectangle= L X B	4.060
26	D27	1		4.580	1.600	Area Rectangle= L X B	7.328
27	D28	1		3.830	2.000	Area Rectangle= L X B	7.660
28	D29	1		1.000	3.380	Area Rectangle= L X B	3.380
29	D30	1		1.500	0.300	Area Rectangle= L X B	0.450
30	D31	1		1.000	1.000	Area Rectangle= L X B	1.000
31	D32	1		0.600	1.480	Area Rectangle= L X B	0.888
32	D32A	1		0.400	0.910	Area Rectangle= L X B	0.364
33	D33	1	0.750	2.255	10.670	Area Trapezium= (Sum of parallel side) X H/2	16.032
34	D34	1	0.500	0.670	3.150	Area Trapezium= (Sum of parallel side) X H/2	1.843
35	D35	1		0.600	1.400	Area Rectangle= L X B	0.840
36	D36	8		2.800	2.800	Area Rectangle= L X B	62.720
37	D37	2		2.800	2.800	Area Rectangle= L X B	15.680
38	D38	1		0.900	1.650	Area Rectangle= L X B	1.485
39	D39	1		0.900	1.100	Area Rectangle= L X B	0.990
40	D40	1		0.900	2.050	Area Rectangle= L X B	1.845
41	D41	1		0.900	0.850	Area Rectangle= L X B	0.765
42	D42	1		0.900	1.000	Area Rectangle= L X B	0.900
43	D43	1		1.050	0.950	Area Rectangle= L X B	0.998
44	D44	1		1.050	1.650	Area Rectangle= L X B	1.733
45	D45	1		6.400	5.800	Area Rectangle= L X B	37.120
46	D46	1	0.220	0.355	2.950	Area Trapezium= (Sum of parallel side) X H/2	0.848
47	D47	1		14.825	0.950	Area Triangle = L X B X1/2	7.042
48	D48	1		0.220	3.225	Area Triangle = L X B X1/2	0.355
49	D49	1		0.780	9.600	Area Rectangle= L X B	7.488
50	D50	1		0.135	1.900	Area Triangle= 1/2 X (Length X Width)	0.128
51	D51	1		0.780	13.890	Area Triangle= 1/2 X (Length X Width)	5.417
52	D52	1		1.010	1.400	Area Rectangle= L X B	1.414
53	D53	2		0.300	0.650	Area Rectangle= L X B	0.390
54	D54	1		2.320	56.110	Area Triangle= 1/2 X (Length X Width)	65.088
55	D55	1		2.615	56.110	Area Triangle= 1/2 X (Length X Width)	73.364
B	TOTAL AREA	DEDUCTION					492.675
C	6TH & 14TH FLOOR OFFICE AREA FAR						1721.426

5 FAR AREA CALCULATIONS

6th & 14th FLOOR CARPET AREA CALCULATION							
6th & 14th FLOOR CARPET AREA = TOTAL ADDITION AREA - TOTAL DEDUCTION AREA							
S.NO.	DESCRIPTION	QUANTITY	LENGTH A (M)	LENGTH B (M)	WIDTH/HT (M)	FORMULA	AREA (SQ.M.)
1	A1	1		10.550	7.190	Area Rectangle= L X B	75.855
2	A2	1		25.310	1.475	Area Triangle= 1/2 X (Length X Width)	18.666
3	A3	1		3.700	29.750	Area Rectangle= L X B	110.075
4	A4	1		0.650	4.440	Area Triangle= 1/2 X (Length X Width)	1.443
5	A5	1	2.550	2.670	0.800	Area Trapezium= (Sum of parallel side) X H/2	2.088
7	A7	1		30.550	5.170	Area Rectangle= L X B	157.944
8	A8	1		26.750	11.280	Area Rectangle= L X B	301.740
9	A9	1		2.300	9.150	Area Rectangle= L X B	21.045
10	A10	1		3.375	10.200	Area Rectangle= L X B	34.425
11	A11	1		26.750	4.100	Area Rectangle= L X B	109.675
12	A12	1		31.150	1.600	Area Rectangle= L X B	49.840
13	A13	1		9.200	1.600	Area Rectangle= L X B	14.720
14	A14	1	10.855	11.240	7.025	Area Trapezium= (Sum of parallel side) X H/2	77.609
15	A15	1		16.500	2.635	Area Triangle= 1/2 X (Length X Width)	22.630
16	A16	1		32.150	9.075	Area Rectangle= L X B	291.761
17	A17	1		26.895	1.770	Area Triangle= 1/2 X (Length X Width)	23.802
18	A18	1	12.245	12.350	1.550	Area Trapezium= (Sum of parallel side) X H/2	19.061
19	A19	1		5.850	0.750	Area Rectangle= L X B	4.388
20	A20	1	11.785	11.350	6.650	Area Trapezium= (Sum of parallel side) X H/2	76.924
21	A21	1	9.385	9.605	3.325	Area Trapezium= (Sum of parallel side) X H/2	31.571
22	A22	1		9.605	1.490	Area Triangle= 1/2 X (Length X Width)	7.156
23	A23	1	1.475	2.095	10.550	Area Trapezium= (Sum of parallel side) X H/2	18.832
24	A24	1	1.900	4.070	15.745	Area Trapezium= (Sum of parallel side) X H/2	46.999
25	A25	1		4.850	2.760	Area Rectangle= L X B	13.386
A	TOTAL AREA	ADDITION					1531.633
6th & 14th FLOOR CARPET AREA = TOTAL ADDITION AREA - TOTAL DEDUCTION AREA							
S.NO.	DESCRIPTION	QUANTITY	LENGTH A (M)	LENGTH B (M)	WIDTH/HT (M)	FORMULA	AREA (SQ.M.)
1	D1	2		0.650	0.300	Area Rectangle= L X B	0.390
2	D2	1		1.800	0.350	Area Rectangle= L X B	0.630
B	TOTAL AREA	DEDUCTION					1.020
C	6th & 14th FLOOR CARPET AREA						1530.613

6 CARPET AREA DIAGRAM

ARCHITECT(HQ) Member Secretary B.P.C — C.T.P.(HQ) Member B.P.C — Chairman B.P.C
Rajneesh Dutt JD(HQ) — JD — PK — ATP

This is a " PROVISIONAL APPROVED BUILDING PLAN" only for purpose of inviting objection from the general public

Authority(HQ)
Directorate of Town and Country Planning, Haryana, Chandigarh

ARCHITECT:
DESIGN FORUM INTERNATIONAL
K-47, KAILASH COLONY
NEW DELHI
TEL : 011 - 46556600

STRUCTURE CONSULTANT:
VINTECH CONSULTANTS
C 35, PAMPOSH ENCLAVE, GREATER KAILASH I,
NEW DELHI, DELHI 110048
Tel: 011 4334 1518

MEP CONSULTANT:
SANELAC CONSULTANTS PVT LTD
C-64/2, Okhla Industrial Area, Phase-II,
New Delhi-110020
Tel: 26383310, 40503959

NOTES:
1. ALL DIMENSIONS ARE IN MM.
2. GATE AND BOUNDARY WALL SHALL BE AS PER STANDARD DESIGN.
3. SPRINKLERS WILL BE PROVIDED IN ENTIRE BUILDING INCLUDING BASEMENTS AS PER N.B.C..
4. RAIN WATER HARVESTING SYSTEM WILL BE PROVIDED AS PER APPLICABLE NORMS.
5. 100% POWER BACK UP WILL BE PROVIDED FOR LIFTS & ESSENTIAL SERVICE AREAS.
6. DISABLED RAMP @ 1:12 SLOPE WITH 900MM HIGH RAILING.
7. ALL BUILDINGS ARE MECHANICALLY VENTILATED AND FULLY AIR CONDITIONED.

PROJECT:
BUILDING PLAN OF COMMERCIAL COLONY MEASURING 4.418 ACRES (LICENCE NO. 197 OF 2008 DATED 05-12-2008) IN SECTOR 66, GURGAON MANESAR URBAN COMPLEX, BEING DEVELOPED BY M/S R. C. SOOD & CO.
C/O ADVANCE INDIA PROJECTS LIMITED,
THE MASTERPIECE, GOLF COURSE ROAD,
SECTOR 54, GURUGRAM - 122002, HARYANA, INDIA

ARCHITECT'S SIGNATURE:
Abhishek Jain
B. Arch.
CA/2010/41402

CLIENT'S SIGNATURE:
For R. C. Sood & Co. Pvt. Ltd. On behalf of Advance India Projects Limited
Authorised Signatory

DRAWING TITLE:
6TH & 14TH FLOOR PLAN

DRAWING NO: 21.A

NORTH:

SCALE: AS MENTION

DATE: 10/02/2020