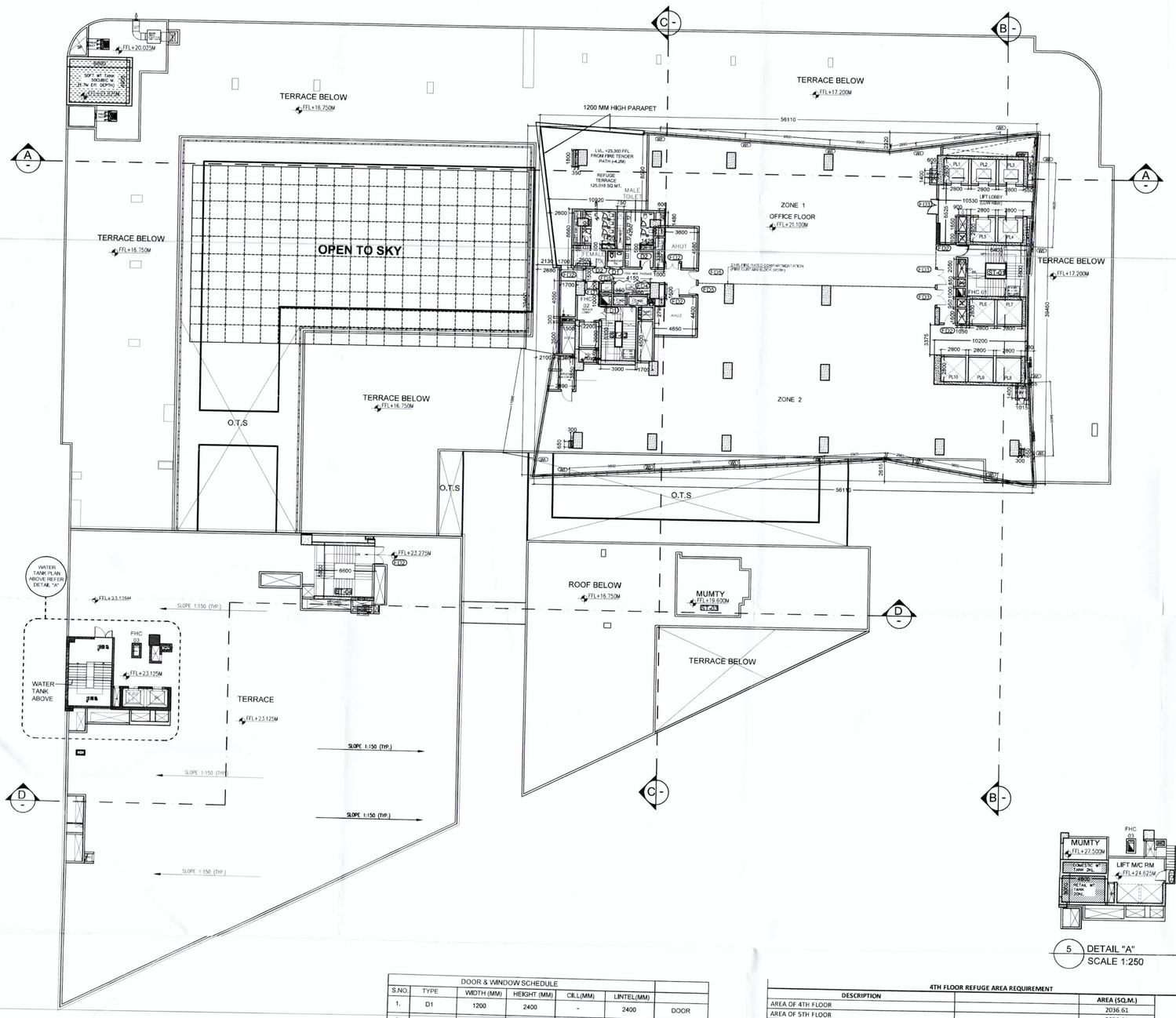

1 FOURTH FLOOR PLAN
SCALE 1:250

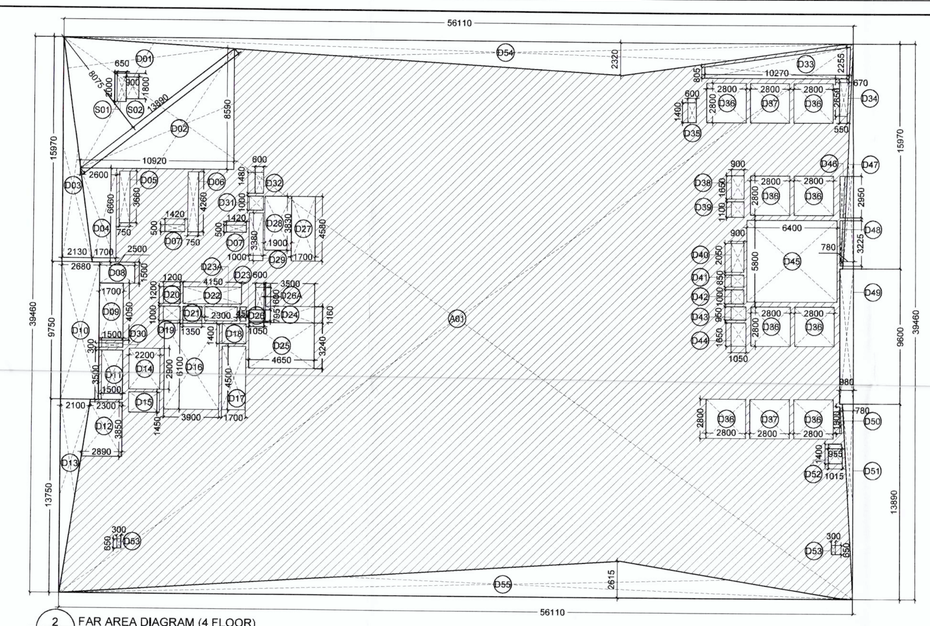

2 FAR AREA DIAGRAM (4 FLOOR)
SCALE 1:200

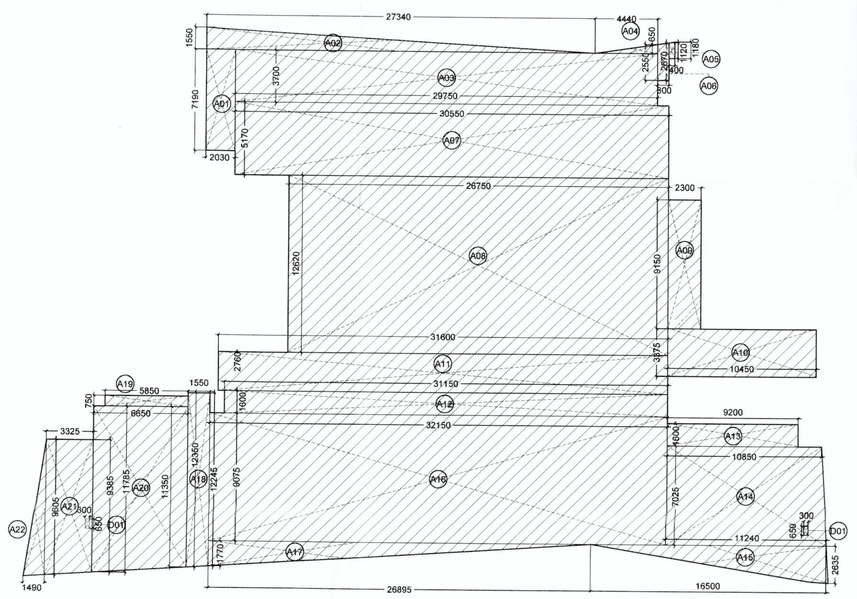

3 CARPET AREA DIAGRAM (4 FLOOR)
SCALE 1:200

5 DETAIL "A"
SCALE 1:250

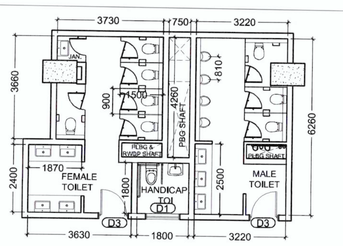

4 TYPICAL TOILET LAYOUT
SCALE 1:100

DOOR & WINDOW SCHEDULE

S.NO.	TYPE	WIDTH (MM)	HEIGHT (MM)	CILL(MM)	LINTEL(MM)	
1.	D1	1200	2400	-	2400	DOOR
2.	D2	1000	2400	-	2400	DOOR
3.	D3	2000	2400	-	2400	DOOR
4.	FD1	1500	2400	-	2400	FIRE DOOR
5.	FD2	1200	2400	-	2400	FIRE DOOR
6.	FD3	1800	2400	-	2400	FIRE DOOR
7.	FD4	4200	2250	-	2250	FIRE DOOR
8.	FD5	1000	2250	-	2250	FIRE DOOR
9.	W1	1000	1000	1400	2400	OPENABLE WINDOW PANEL

4TH FLOOR REFUGE AREA REQUIREMENT

DESCRIPTION					AREA (SQ.M.)
AREA OF 4TH FLOOR					2036.61
AREA OF 5TH FLOOR					2036.61
TOTAL AREA					4073.22
OCCUPANCY LOAD 1 PERS.@10SQ.M =				[(GROSS AREA CURRENT FLOOR+GROSS AREA IMMEDIATE UPPER FLOOR)/10]	407.322
REFUGE AREA REQUIRED @0.3 SQ.M. PER PERSON=0.9 SQ.M. =					123.9966
REFUGE AREA CALCULATION (PROVIDED)					
DESCRIPTION	QUANTITY	LENGTH A (M)	LENGTH B (M)	WIDTH/HT (M)	FORMULA	AREA (SQ.M.)
D01	1		13.890	8.075	Area Triangle= 1/2 X (Length X Width)	56.081
D02	1		10.920	8.590	Area Triangle= 1/2 X (Length X Width)	46.901
D04	1	2.600	1.700	6.660	Area Trapezium= (Sum of parallel side) X H/2	14.319
D08	1		2.500	1.500	Area Rectangle= L X B	3.750
D09	1		1.700	4.050	Area Rectangle= L X B	6.885
TOTAL AREA			ADDITION			127.936
S01	1		2.000	0.650	Area Rectangle= L X B	1.300
S02	1		1.800	0.900	Area Rectangle= L X B	1.620
TOTAL AREA			DEDUCTION			2.920
TOTAL REFUGE AREA						125.016

FOR REFUGE AREA, REF FROM NBC 2016,PART 4, SECTION 6.4.2.2

OCCUPANT CALCULATION

OFFICE BUILDINGS - UNDER NATIONAL BUILDING CODE 2016			
4TH FLOOR AREA	1603.668	SQ.M.	NOTES
OCCUPANT LOAD	10	SQ.M/PERSON	For Occupant load, Ref. from NBC Part4, Fire & Life Safety, Table 03
TOTAL POPULATION	160	PERSONS	
MALE	50%	96	
FEMALE	40%	64	

TOILET CALCULATION

	REQUIRED		PROPOSED		NOTES
	MALE	FEMALE	MALE	FEMALE	
WC	4	4	4	5	For Toilet Requirements Ref. from NBC Part 9 , Plumbing, Services, Section 2, Table 1
WB	4	3	4	4	
UR	4	NA	4	NA	

HANDICAPED TOILETS WC & WB ARE COUNTED IN MALE TOILET CALCULATION

4th FLOOR OFFICE EAR CALCULATION

4th FLOOR OFFICE AREA = TOTAL ADDITION AREA - TOTAL DEDUCTION AREA

S.NO.	DESCRIPTION	QUANTITY	LENGTH A (M)	LENGTH B (M)	WIDTH/HT (M)	FORMULA	AREA (SQ.M.)
1	A01	1		56.110	39.460	Area Rectangle= L X B	2214.101
A	TOTAL AREA						2214.101
			ADDITION				
S.NO.	DESCRIPTION	QUANTITY	LENGTH A (M)	LENGTH B (M)	WIDTH/HT (M)	FORMULA	AREA (SQ.M.)
1	D01	1		13.890	8.075	Area Triangle= 1/2 X (Length X Width)	56.081
2	D02	1		10.920	8.590	Area Triangle= 1/2 X (Length X Width)	46.901
3	D03	1		2.130	15.970	Area Triangle= 1/2 X (Length X Width)	17.008
4	D04	1	2.600	1.700	6.660	Area Trapezium= (Sum of parallel side) X H/2	14.319
5	D05	1		0.750	3.660	Area Rectangle= L X B	2.745
6	D06	1		0.750	4.260	Area Rectangle= L X B	3.195
7	D07	2		0.500	1.420	Area Rectangle= L X B	1.420
8	D08	1		2.500	1.500	Area Rectangle= L X B	3.750
9	D09	1		1.700	4.050	Area Rectangle= L X B	6.885
10	D10	1		9.750	2.680	Area Rectangle= L X B	26.130
11	D11	1		3.500	1.500	Area Rectangle= L X B	5.250
12	D12	1	2.890	2.300	3.850	Area Trapezium= (Sum of parallel side) X H/2	9.991
13	D13	1		13.750	2.100	Area Triangle= 1/2 X (Length X Width)	14.438
14	D14	1		2.200	2.900	Area Rectangle= L X B	6.380
15	D15	1		2.200	1.450	Area Rectangle= L X B	3.190
16	D16	1		6.100	3.900	Area Rectangle= L X B	23.790
17	D17	1		4.500	1.700	Area Rectangle= L X B	7.650
18	D18	1		1.700	1.400	Area Rectangle= L X B	2.380
19	D19	1		1.200	1.000	Area Rectangle= L X B	1.200
20	D20	1		1.200	1.200	Area Rectangle= L X B	1.440
21	D21	1		1.000	1.350	Area Rectangle= L X B	1.350
22	D22	1		4.150	1.200	Area Rectangle= L X B	4.980
23	D23	1		1.000	0.450	Area Rectangle= L X B	0.450
24	D23A	1		1.000	2.300	Area Rectangle= L X B	2.300
25	D24	1		3.500	1.160	Area Rectangle= L X B	4.060
26	D25	1		3.240	4.650	Area Rectangle= L X B	15.066
27	D26	1		1.160	1.050	Area Rectangle= L X B	1.218
28	D26A	1		1.600	0.600	Area Rectangle= L X B	0.960
29	D27	1		4.580	1.700	Area Rectangle= L X B	7.786
30	D28	1		3.830	1.900	Area Rectangle= L X B	7.277
31	D29	1		3.380	1.000	Area Rectangle= L X B	3.380
32	D30	1		1.500	0.300	Area Rectangle= L X B	0.450
33	D31	1		1.000	1.000	Area Rectangle= L X B	1.000
34	D32	1		1.480	0.600	Area Rectangle= L X B	0.888
35	D33	1	2.255	0.805	10.270	Area Trapezium= (Sum of parallel side) X H/2	15.713
36	D34	1	0.550	0.670	2.650	Area Trapezium= (Sum of parallel side) X H/2	1.617
37	D35	1		1.400	0.600	Area Rectangle= L X B	0.840
38	D36	8		2.800	2.800	Area Rectangle= L X B	62.720
39	D37	2		2.800	2.800	Area Rectangle= L X B	15.680
40	D38	1		1.650	0.900	Area Rectangle= L X B	1.485
41	D39	1		1.100	0.900	Area Rectangle= L X B	0.990
42	D40	1		2.050	0.900	Area Rectangle= L X B	1.845
43	D41	1		0.850	0.900	Area Rectangle= L X B	0.765
44	D42	1		1.000	0.900	Area Rectangle= L X B	0.900
45	D43	1		0.950	1.050	Area Rectangle= L X B	0.998
46	D44	1		1.650	1.050	Area Rectangle= L X B	1.733
47	D45	1		6.400	5.800	Area Rectangle= L X B	37.120
48	D46	1				As per plan	0.854
49	D47	1		15.970	0.780	Area Triangle= 1/2 X (Length X Width)	6.228
50	D48	1				As per plan	0.454
51	D49	1		9.600	0.980	Area Rectangle= L X B	9.408
52	D50	1				As per plan	0.139
53	D51	1		0.780	13.890	Area Triangle= 1/2 X (Length X Width)	5.417
54	D52	1	1.015	0.955	1.400	Area Trapezium= (Sum of parallel side) X H/2	1.379
55	D53	2		0.650	0.300	Area Rectangle= L X B	0.390
56	D54	1		2.320	56.110	Area Triangle= 1/2 X (Length X Width)	65.088
57	D55	1		2.615	56.110	Area Triangle= 1/2 X (Length X Width)	73.364
B	TOTAL AREA			DEDUCTION			610.433
C	4th FLOOR OFFICE AREA FAR						1603.668

4th FLOOR OFFICE CARPET AREA CALCULATION

4th FLOOR OFFICE AREA = TOTAL ADDITION AREA - TOTAL DEDUCTION AREA

S.NO.	DESCRIPTION	QUANTITY	LENGTH A (M)	LENGTH B (M)	WIDTH/HT (M)	FORMULA	AREA (SQ.M.)
1	A01	1		7.190	2.030	Area Rectangle= L X B	14.596
2	A02	1		27.340	1.550	Area Triangle= 1/2 X (Length X Width)	21.189
3	A03	1		3.700	29.750	Area Rectangle= L X B	110.075
4	A04	1		4.440	0.650	Area Triangle= 1/2 X (Length X Width)	1.443
5	A05	1	1.180	1.120	0.400	Area Trapezium= (Sum of parallel side) X H/2	0.460
6	A06	1	2.550	5.670	0.800	Area Trapezium= (Sum of parallel side) X H/2	3.288
7	A07	1		5.170	30.550	Area Rectangle= L X B	157.944
8	A08	1		26.750	12.620	Area Rectangle= L X B	337.585
9	A09	1		9.150	2.300	Area Rectangle= L X B	21.045
10	A10	1		10.450	3.375	Area Rectangle= L X B	35.269
11	A11	1		11.600	2.760	Area Rectangle= L X B	87.716
12	A12	1		31.150	1.600	Area Rectangle= L X B	49.840
13	A13	1		9.200	1.600	Area Rectangle= L X B	14.720
14	A14	1	10.850	11.240	7.025	Area Trapezium= (Sum of parallel side) X H/2	77.591
15	A15	1		16.500	2.635	Area Triangle= 1/2 X (Length X Width)	21.739
16	A16	1		32.150	9.075	Area Rectangle= L X B	291.761
17	A17	1		26.895	1.770	Area Triangle= 1/2 X (Length X Width)	23.802
18	A18	1	12.245	12.350	1.550	Area Trapezium= (Sum of parallel side) X H/2	19.061
19	A19	1		0.750	5.850	Area Rectangle= L X B	4.388
20	A20	1	11.785	11.350	6.650	Area Trapezium= (Sum of parallel side) X H/2	76.924
21	A21	1	9.385	9.605	3.325	Area Trapezium= (Sum of parallel side) X H/2	31.571
22	A22	1		1.490	9.605	Area Triangle= 1/2 X (Length X Width)	7.156
A	TOTAL AREA			ADDITION			1408.661
S.NO.	DESCRIPTION	QUANTITY	LENGTH A (M)	LENGTH B (M)	WIDTH/HT (M)	FORMULA	AREA (SQ.M.)
1	D01	2		0.650	0.300	Area Triangle= 1/2 X (Length X Width)	0.195
2	D02	1		1.830	0.800	Area Triangle= 1/2 X (Length X Width)	0.732
B	TOTAL AREA			DEDUCTION			0.927
C	4th FLOOR OFFICE AREA CARPET						1407.734

Rajesh Dutt
JD(HQ)

This is a " PROVISIONAL APPROVED BUILDING PLAN" not for purpose of building permission from the general public

Authorised (HQ)
Directorate of Town and Country Planning, Haryana, Chandigarh

ARCHITECT:
DESIGN FORUM INTERNATIONAL
R-47, KAILASH COLONY
NEW DELHI
TEL: 011 - 46536650

STRUCTURE CONSULTANT:
VINTECH CONSULTANTS
C 30, PAMPOSH ENCLAVE, GREATER KAILASH II,
NEW DELHI, DELHI 110048
Tel :011 4314 1516

MEP CONSULTANT:
SANELAC CONSULTANTS PVT LTD
C-64/2, Okhla Industrial Area, Phase-II,
New Delhi-110020
Tel : 26385310, 40602959

NOTES:
1. ALL DIMENSIONS ARE IN MM.
2. GATE AND BOUNDARY WALL SHALL BE AS PER STANDARD DESIGN.
3. SPRINKLERS WILL BE PROVIDED IN ENTIRE BUILDING INCLUDING BASEMENTS AS PER N.B.C.
4. RAIN WATER HARVESTING SYSTEM WILL BE PROVIDED AS PER APPLICABLE NORMS.
5. 100% POWER BACK UP WILL BE PROVIDED FOR LIFTS & ESSENTIAL SERVICE AREAS.
6. DISABLED RAMP @ 1:12 SLOPE WITH 900MM HIGH RAILING.
7. ALL BUILDINGS ARE MECHANICALLY VENTILATED AND FULLY AIR CONDITIONED.

PROJECT:
BUILDING PLAN OF COMMERCIAL COLONY MEASURING 4.418 ACRES (LICENCE NO. 197 OF 2008 DATED 05-12-2008) IN SECTOR 66, GURGAON MANESAR URBAN COMPLEX, BEING DEVELOPED BY M/S R. C. SOOD & CO. C/O ADVANCE INDIA PROJECTS LIMITED, THE MASTERPIECE, GOLF COURSE ROAD, SECTOR 54, GURUGRAM -122002, HARYANA, INDIA

ARCHITECT'S SIGNATURE:

Abhishek Jain
D. Arch. (Delhi)
CA/2010-50081

CLIENT'S SIGNATURE:

For R. C. Sood & Co. Pvt. Ltd. On Advance India Projects Limited

Authorised Signatory

DRAWING TITLE:
FOURTH FLOOR PLAN

DRAWING NO:
19.A

NORTH:

SCALE:
AS MENTION

DATE:
10/02/2020