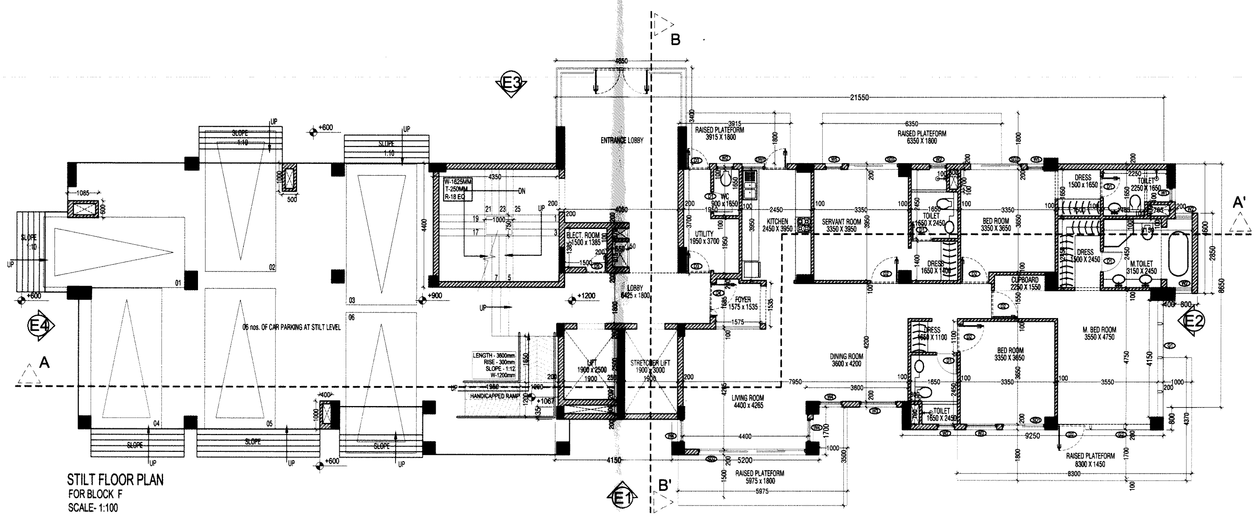

STILT FLOOR PLAN
FOR BLOCK F
SCALE- 1:100

(GROUND COVERAGE AREA) - FOR BLOCK F				
NO.	WIDTH	LENGTH	Nos.	AREA in SqM
ADDITIONS				
A	0.800	2.850	2	4.560
B	0.400	4.600	2	3.680
C	9.250	0.800	2	14.800
D	5.200	1.700	2	17.680
E	4.650	3.400	1	15.810
F	38.450	8.650	1	332.593
G	3.650	0.435	1	1.588
TOTAL ADDITIONS				390.710
SUBTRACTIONS				
			0	0.000
TOTAL SUBTRACTIONS				0.000
TOTAL GROUND COVERAGE AREA				390.710

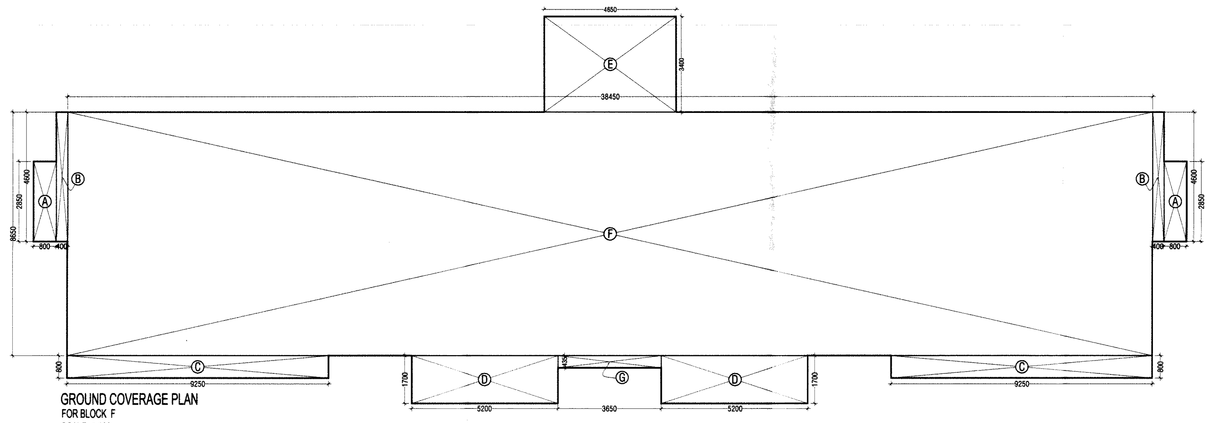

GROUND COVERAGE PLAN
FOR BLOCK F
SCALE- 1:100

(STILT FLOOR F.A.R.) - FOR BLOCK F				
NO.	WIDTH	LENGTH	Nos.	AREA in SqM
ADDITIONS				
A	0.800	2.850	1	2.280
B	0.400	4.600	1	1.840
C	9.250	0.800	1	7.400
D	5.200	1.700	1	8.840
E	4.650	3.400	1	15.810
F	21.550	8.650	1	186.408
G	4.150	0.435	1	1.805
H	0.500	1.000	1	0.500
J	1.085	0.600	1	0.651
K	0.400	1.000	1	0.400
L	4.350	4.400	1	19.140
TOTAL ADDITIONS				246.074
SUBTRACTIONS				
				0.0000
TOTAL SUBTRACTIONS				0.000
TOTAL AREA				246.074

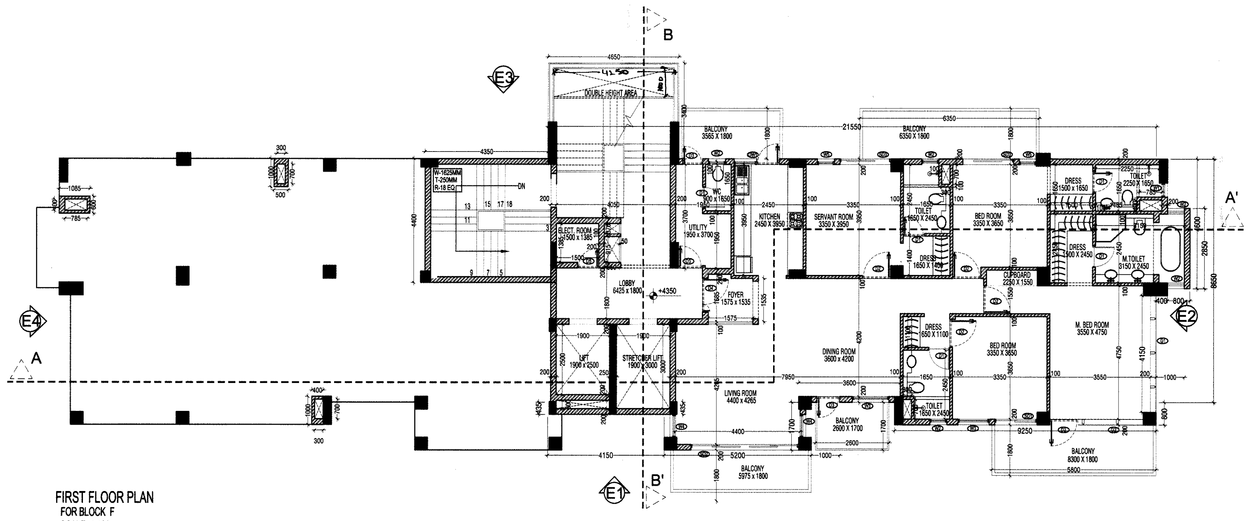

FIRST FLOOR PLAN
FOR BLOCK F
SCALE- 1:100

JOINERY DETAILS					
S.No	TYPE	WIDTH	HEIGHT	SILL	LINTEL/ BEAM BOTTOM
1	D1	750	2150	0	2150
2	D2	1000	2150	0	2150
3	D3	800	2150	0	2150
4	D4	1200	2550	0	2550
5	D5	750	2150	0	2150
6	SD1	1500	2550	0	2550
7	SD2	3800	2550	0	2550
8	SD3	1800	2550	0	2550
9	DW1	1600	1650	900	2550
10	W1	500	1950	600	2550
11	W2	600	1950	600	2550
12	W2A	600	1500	1050	2550
13	W3	1100	1950	600	2550
14	W4	800	1950	600	2550
15	W5	600	1950	600	2550

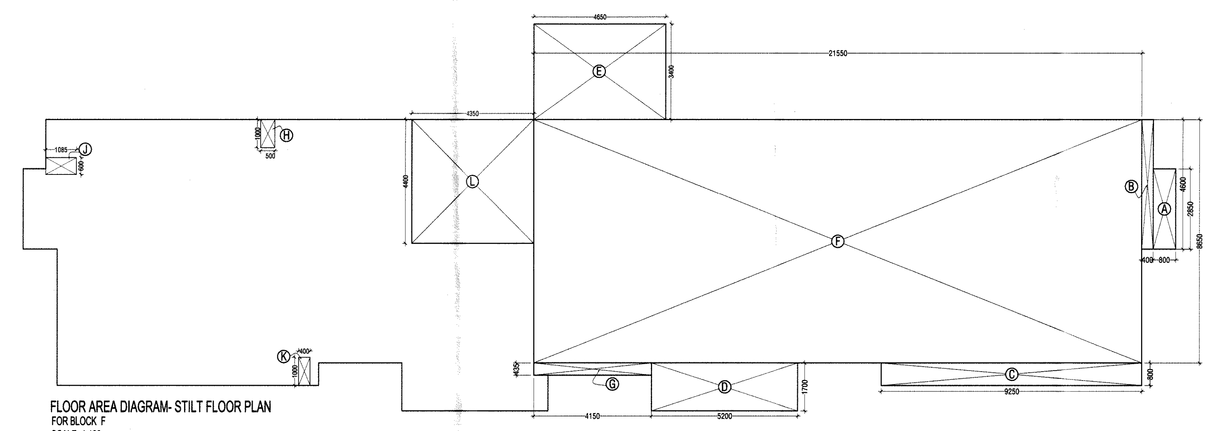

FLOOR AREA DIAGRAM- STILT FLOOR PLAN
FOR BLOCK F
SCALE- 1:100

(FIRST FLOOR F.A.R.) - FOR BLOCK F				
NO.	WIDTH	LENGTH	Nos.	AREA in SqM
ADDITIONS				
A	0.800	2.850	1	2.280
B	0.400	4.600	1	1.840
C	9.250	0.800	1	7.400
D	5.200	1.700	1	8.840
E	4.650	3.400	1	15.810
F	21.550	8.650	1	186.408
G	4.150	0.435	1	1.805
H	0.500	1.000	1	0.500
J	1.085	0.600	1	0.651
K	0.400	1.000	1	0.400
L	4.350	4.400	1	19.140
TOTAL ADDITIONS				246.074
SUBTRACTIONS				
1	0.785	0.400	2	0.6280
2	0.300	0.700	4	0.8400
3	0.800	1.000	1	0.8000
4	0.550	0.370	1	0.2035
5	0.550	0.915	1	0.5033
6	1.900	2.500	1	4.7500
7	1.900	3.000	1	5.7000
8	1.900	0.300	1	0.5700
9	4.250	1.000	1	4.2500
TOTAL SUBTRACTIONS				18.245
TOTAL AREA				226.829

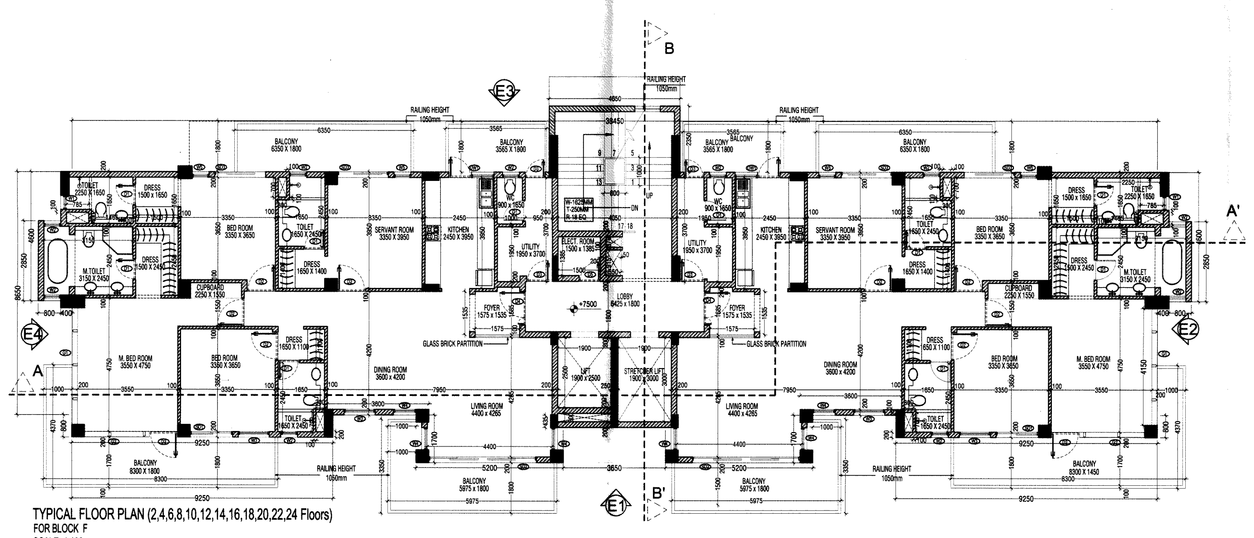

TYPICAL FLOOR PLAN (2,4,6,8,10,12,14,16,18,20,22,24 Floors)
FOR BLOCK F
SCALE- 1:100

PARKING AREA AT STILT FLOOR - FOR BLOCK F				
NO.	BREADTH	LENGTH	Nos.	AREA in SqM
ADDITIONS				
GROUND COVERAGE AREA				390.710
TOTAL ADDITIONS				390.710
SUBTRACTIONS				
STILT FLOOR AREA				245.074
TOTAL SUBTRACTIONS				246.074
TOTAL PARKING AREA				146.637

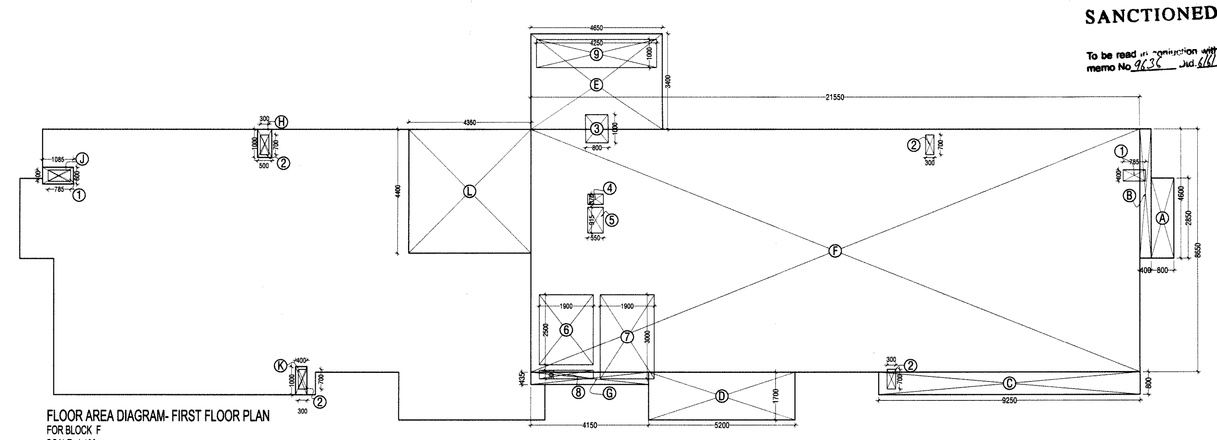

FLOOR AREA DIAGRAM- FIRST FLOOR PLAN
FOR BLOCK F
SCALE- 1:100

Notes

1. ALL LIFTS SHALL HAVE 100% POWER BACK-UP.
2. ALL ELECTRICAL INSTALLATIONS SHALL BE AS PER PROVISIONS OF NBC.
3. VENTILATION IN BASEMENTS SHALL BE AS PER RELEVANT NBC PROVISIONS 12- 15 AIR CHANGES PER HOUR FOR NORMAL OPERATION 30 AIR CHANGES PER HOUR FOR OPERATION IN CASE OF FIRE
4. FIRE-FIGHTING / SAFETY PROVISIONS WILL BE AS PER RELEVANT NBC PROVISIONS
5. BUILDING STRUCTURE DESIGNED EARTH QUAKE RESISTANT
6. ALL RAMPS ARE IN 1:10 SLOP FOR CARS & 1:20 FOR HANDICAPS UNTIL UNLESS SPECIFIED
7. 200 mm WIDE (AAC) BLOCKS SHALL BE USED FOR EXTERNAL WALLS & 100 MM WIDE (AAC) BLOCKS SHALL BE USED FOR INTERNAL WALLS
8.KITCHEN & TOILETS EXHAUST FAN PROVIDED / MECHANICALLY LIT & VENTILATED.

Key Plan

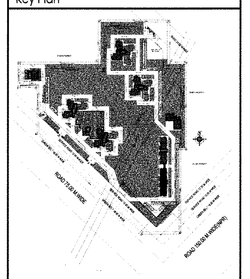

D.T.P. (HQ) Member Secretary D.P.C.
S.T.P. (G) Member D.P.C.
C.T.P. (Hr) Chairman D.P.C.

AD JD PA SD ATP

SANCTIONED
To be read in connection with memo No. 9436 dt 5/3/12

Architects Signature
BALJEET KUMAR, Architect
Council of Architecture
Registration No. CA/2008/42228

Owner's Signature

Clients
M/S MAHAGORI ESTATES PVT. LTD.

Architects
Arcop Associates Pvt. Ltd.
E-108, Greater Kailash Enclave - I
New Delhi, India
Ph.: 26242050

Job Title
"PROPOSED Building Plan of Group Housing scheme on land measuring 11.25 ACRES (License no. 104 of 2011 dated 11/12/2011) in Sector 102, Gurgaon Manesar Urban Complex being developed by MAHAGORI ESTATES PVT. LTD.

Drawing Title
PLANS & FLOOR AREA DIAGRAM
BLOCK - F

Job No.		Drawing No.
2011/68		A-33A
Drawn: ROHIT	Checked: BK	
Date: 06.02.12	Scale: 1:100	Revisions: 0