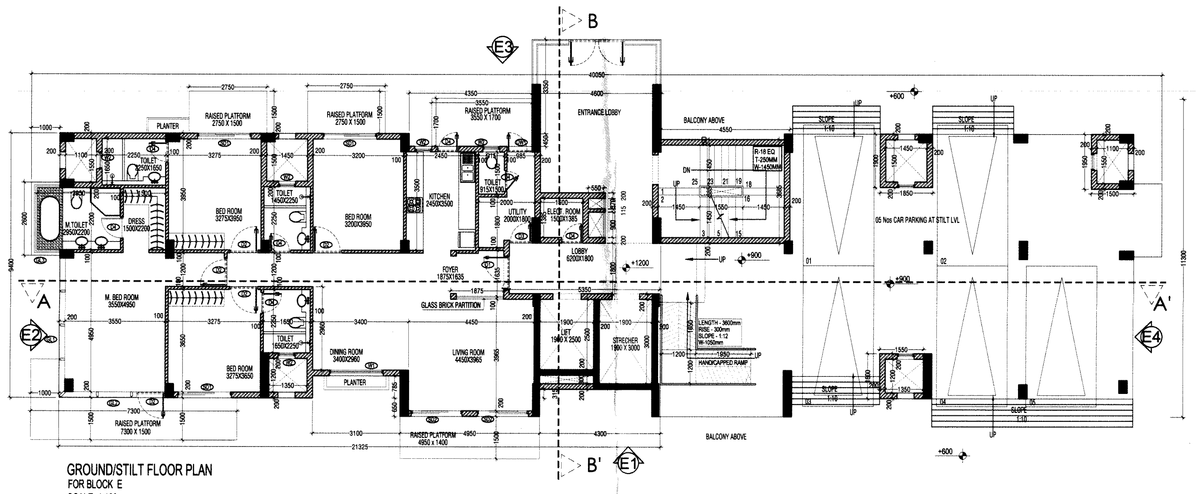

GROUND/STILT FLOOR PLAN
FOR BLOCK E
SCALE- 1:100

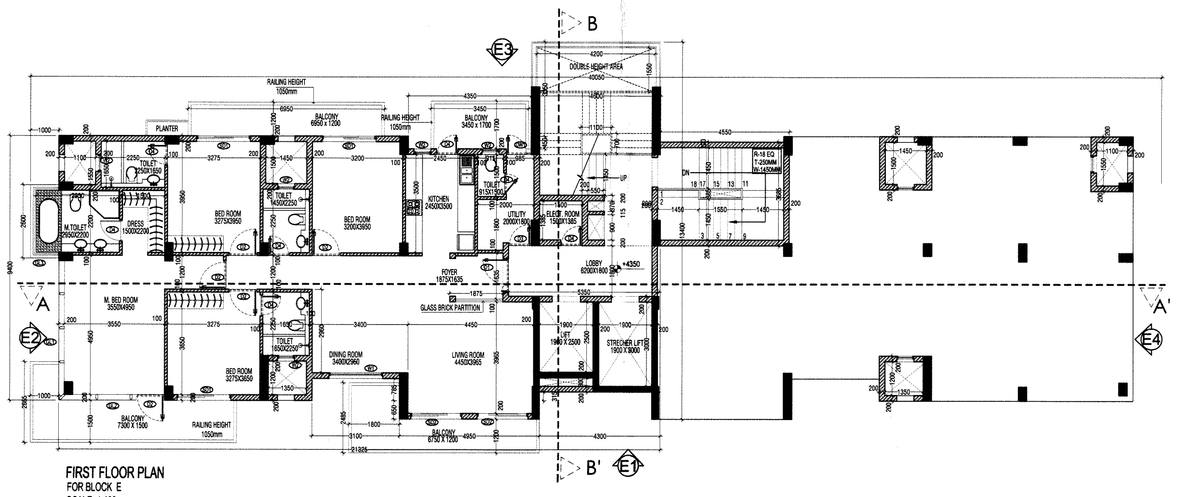

FIRST FLOOR PLAN
FOR BLOCK E
SCALE- 1:100

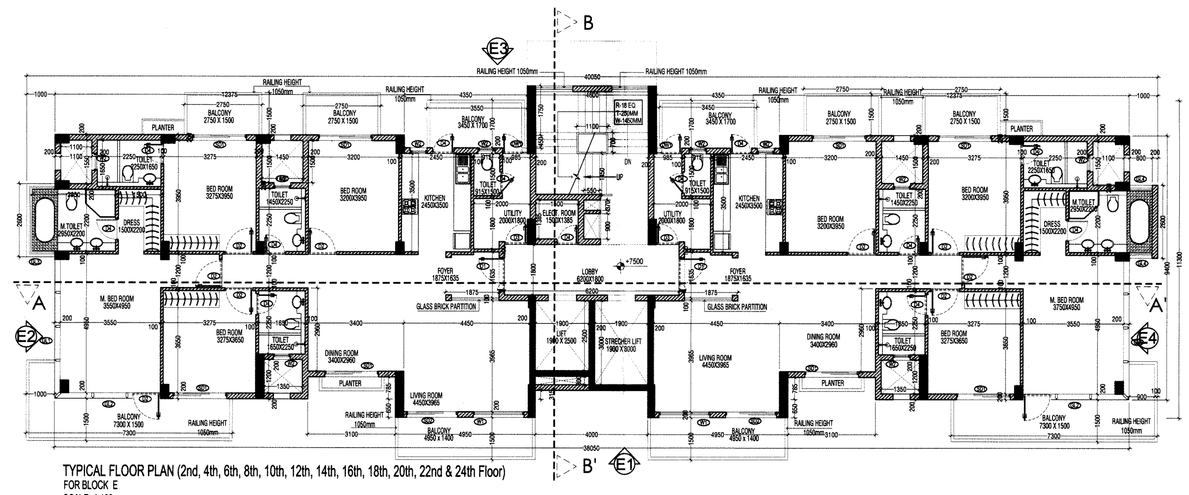

TYPICAL FLOOR PLAN (2nd, 4th, 6th, 8th, 10th, 12th, 14th, 16th, 18th, 20th, 22nd & 24th Floor)
FOR BLOCK E
SCALE- 1:100

GROUND COVERAGE FOR BLOCK E				
NO.	BREADTH	LENGTH	Nos.	AREA in SqM
ADDITIONS				
A	4.600	3.350	1	15.410
B	38.050	9.400	1	357.670
C	1.000	2.600	2	5.200
D	4.950	0.650	2	6.435
TOTAL ADDITIONS				384.715
SUBTRACTIONS				
1	4.350	0.450	2	3.915
2	3.100	0.785	2	4.867
3	4.000	0.315	1	1.260
TOTAL SUBTRACTIONS				10.042
TOTAL COVERED AREA				374.673

STILT FLOOR F.A.R. - FOR BLOCK E				
NO.	BREADTH	LENGTH	Nos.	AREA in SqM
ADDITIONS				
A	4.600	3.350	1	15.410
B	21.325	9.400	1	200.455
C	1.000	2.600	1	2.600
D	4.950	0.650	1	3.218
E	1.850	1.900	1	3.515
F	1.500	1.950	1	2.925
G	1.550	1.600	1	2.480
H	4.550	3.685	1	16.767
TOTAL ADDITIONS				247.369
SUBTRACTIONS				
1	4.350	0.450	1	1.958
2	3.100	0.785	1	2.434
3	4.300	0.315	1	1.355
TOTAL SUBTRACTIONS				5.746
TOTAL COVERED AREA				241.624

FIRST FLOOR F.A.R. - FOR BLOCK E				
NO.	BREADTH	LENGTH	Nos.	AREA in SqM
ADDITIONS				
A	4.600	3.350	1	15.410
B	21.325	9.400	1	200.455
C	1.000	2.600	1	2.600
D	4.950	0.650	1	3.218
E	1.850	1.900	1	3.515
F	1.500	1.950	1	2.925
G	1.550	1.600	1	2.480
H	4.550	3.685	1	16.767
TOTAL ADDITIONS				247.369
SUBTRACTIONS				
1	1.100	1.550	2	3.410
2	1.550	1.450	2	4.495
3	4.350	0.450	1	1.958
4	1.100	0.700	1	0.770
5	0.550	0.370	1	0.204
6	0.550	0.900	1	0.495
7	1.900	2.500	1	4.750
8	1.900	3.000	1	5.700
9	1.900	0.300	1	0.570
10	4.300	0.315	1	1.355
11	1.350	1.200	2	3.240
12	3.100	0.785	1	2.434
13	4.200	1.550	1	6.510
TOTAL SUBTRACTIONS				36.889
TOTAL COVERED AREA				211.480

PARKING AREA AT STILT FLOOR - FOR BLOCK E				
NO.	BREADTH	LENGTH	Nos.	AREA in SqM
ADDITIONS				
GROUND COVERAGE AREA				374.673
TOTAL ADDITIONS				374.673
SUBTRACTIONS				
STILT FLOOR AREA				241.624
TOTAL SUBTRACTIONS				241.624
TOTAL PARKING AREA				133.049

JOINERY DETAILS					
S.No	TYPE	WIDTH	HEIGHT	SILL	LINTEL/ BEAM BOTTOM
1	DI	1200	2450	0	2450
2	D2	1000	2150	0	2150
3	D3	800	2150	0	2150
4	D4	750	2150	0	2150
5	DW1	685	2150	1050	2150
6	SD1	1900	2450	0	2450
7	SD2	1600	2450	0	2450
8	W1	1800	2450	0	2450
9	W2	600	1850	600	2450
10	GL1	4950	2800	0	2800
11	GL2	2750	2800	0	2800
12	GL3	4200	2200	600	2800
13	GL4	800	2200	600	2800

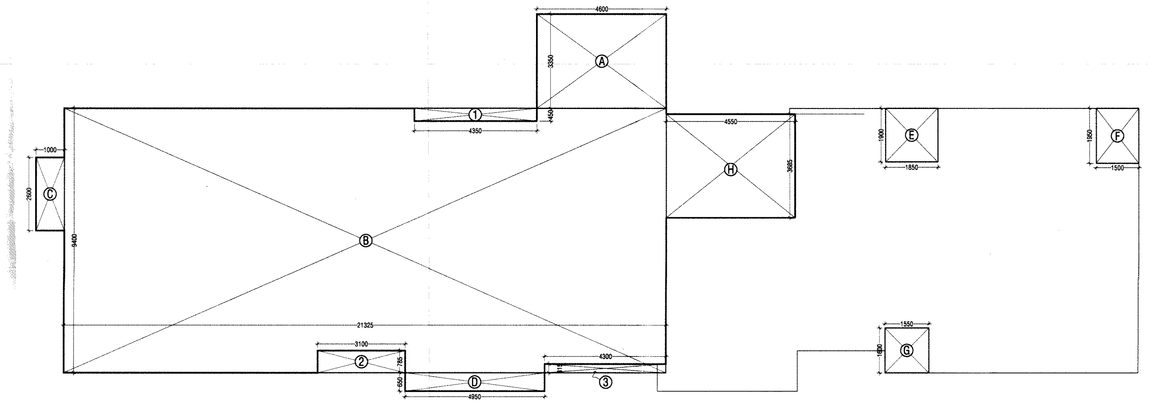

GROUND/STILT AREA DIAGRAM
FOR BLOCK E
SCALE- 1:100

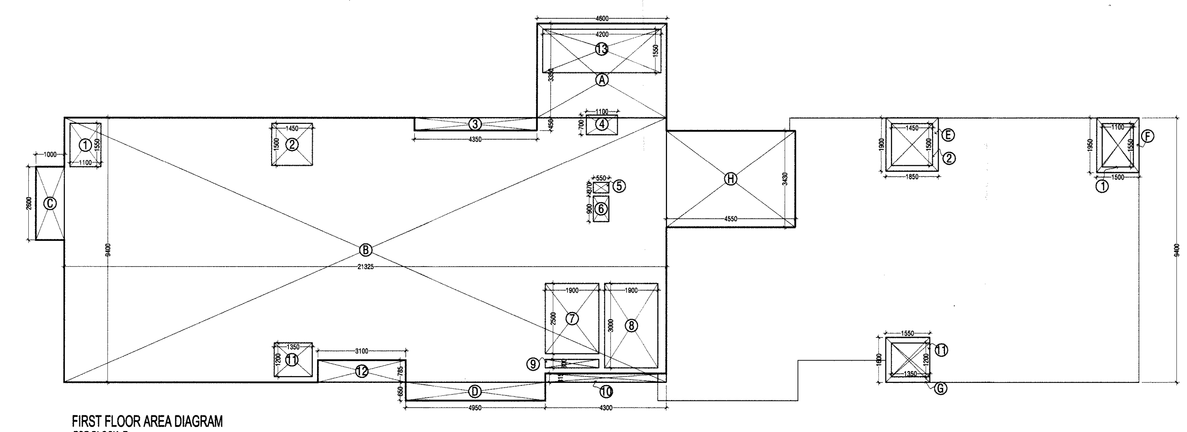

FIRST FLOOR AREA DIAGRAM
FOR BLOCK E
SCALE- 1:100

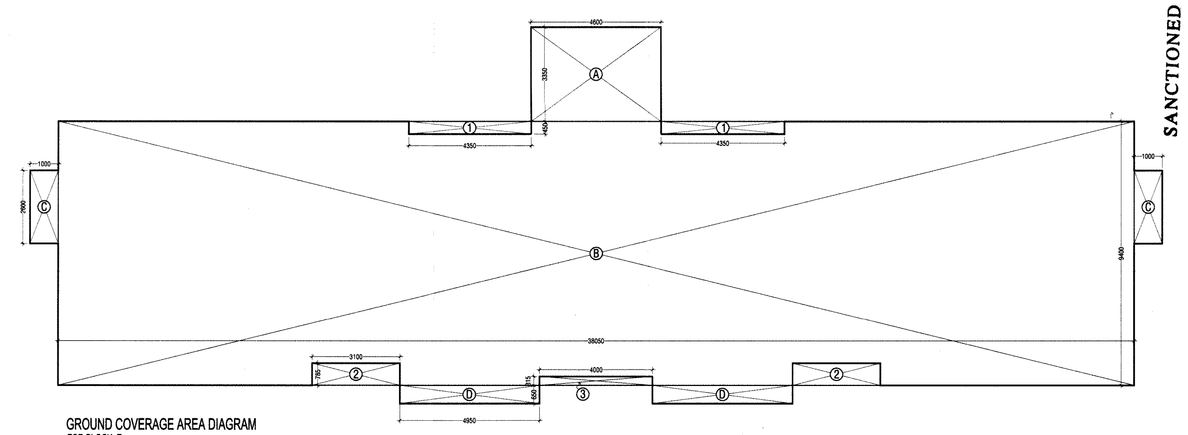

GROUND COVERAGE AREA DIAGRAM
FOR BLOCK E
SCALE- 1:100

Notes

1. ALL LIFTS SHALL HAVE 100% POWER BACK-UP.
2. ALL ELECTRICAL INSTALLATIONS SHALL BE AS PER PROVISIONS OF NBC.
3. VENTILATION IN BASEMENTS SHALL BE AS PER RELEVANT NBC PROVISIONS 12- 15 AIR CHANGES PER HOUR FOR NORMAL OPERATION 30 AIR CHANGES PER HOUR FOR OPERATION IN CASE OF FIRE
4. FIRE-FIGHTING / SAFETY PROVISIONS WILL BE AS PER RELEVANT NBC PROVISIONS
5. BUILDING STRUCTURE DESIGNED EARTH QUAKE RESISTANT
6. ALL RAMPS ARE IN 1:10 SLOP FOR CARS & 1:20 FOR HANDICAPS UNTIL UNLESS SPECIFIED
7. 200 mm WIDE (AAC) BLOCKS SHALL BE USED FOR EXTERNAL WALLS & 100 MM WIDE (AAC) BLOCKS SHALL BE USED FOR INTERNAL WALLS
8.KITCHEN & TOILETS EXHAUST FAN PROVIDED / MECHANICALLY LIT & VENTILATED.

Key Plan

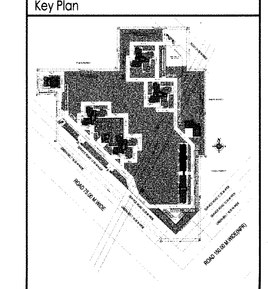

D.T.P. Manager B.P.C. | B.P.C. | C.T.P. (TE) Chairman B.P.C.

AD JD JA SD ATP

SANCTIONED

To be read in conjunction with name No. 75/82 Dtd. 27/1/12

Architects Signature

BALJEET KUMAR, Architect
Council of Architecture
Registration No. CA/2008/42228

Owner's Signature

Clients
M/S MAHAGORI ESTATES PVT. LTD.

Architects
Arcop Associates Pvt. Ltd.
E-106, Greater Kailash Enclave - I
New Delhi, India
Ph : 26242050

Job Title
"PROPOSED Building Plan of Group Housing scheme on land measuring 11.25 ACRES (License no. 104 of 2011 dated 11/12/2011) in Sector 102, Gurgaon Manesar Urban Complex being developed by MAHAGORI ESTATES PVT. LTD.

Drawing Title
PLANS & FLOOR AREA DIAGRAM
BLOCK - E

Job No.		Drawing No.
2011/68		A-29A
Drawn: SUDHANSU	Checked: BK	
Date: 05.02.12	Scale: 1:100	Revisions: 0