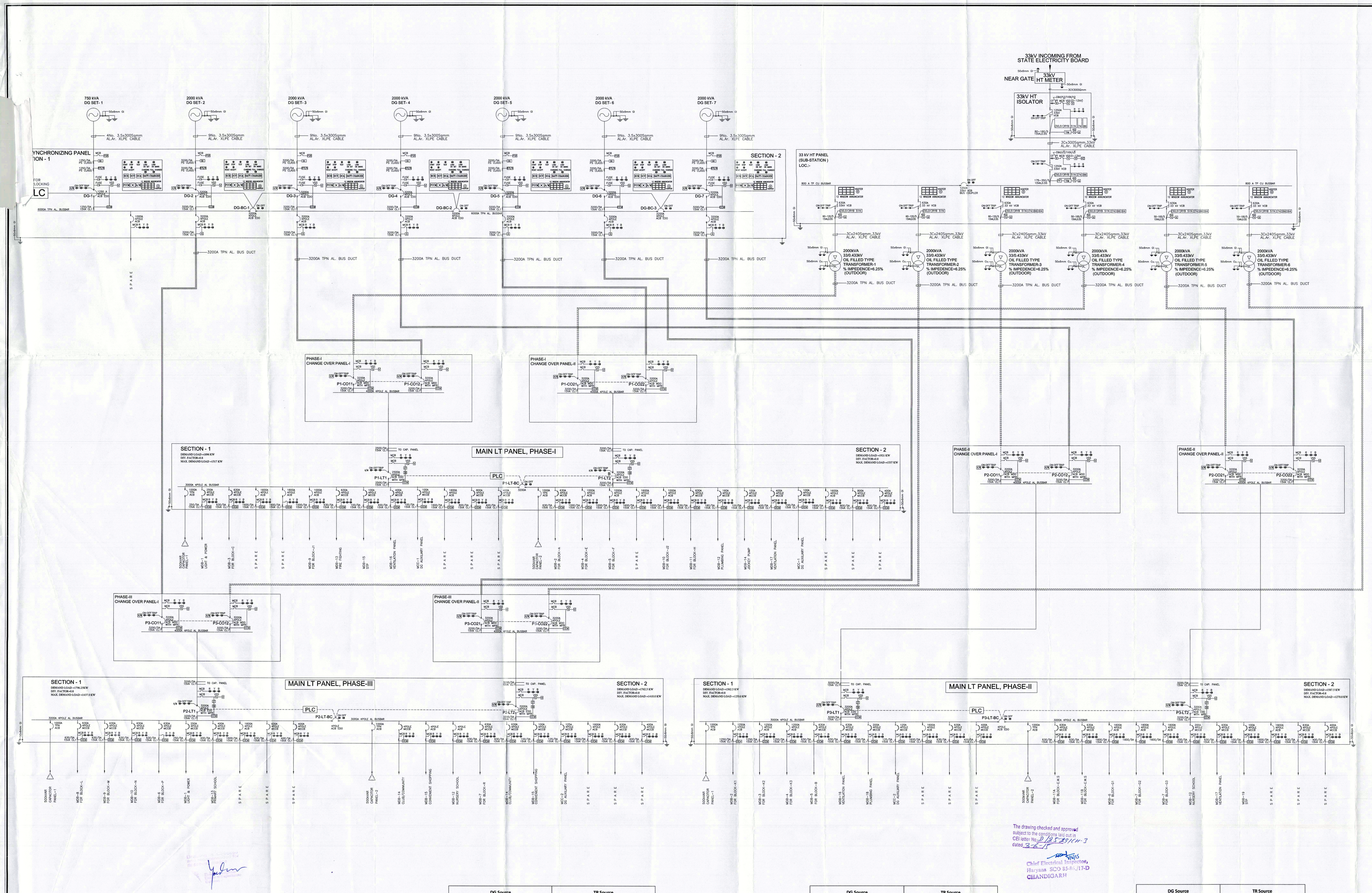

The drawing checked and approved subject to the conditions laid out in CEI letter No. 2/25-89/1141-3 dated 3-6-15

Chief Electrical Inspector, Haryana SCO 85-88/17-D CHANDIGARH

Load Description	DG Synchronization Panel									
	DG1	DG2	DG-BC1	DG3	DG4	DG-BC2	DG5	DG6	DG-BC3	DG7
	750 kVA	2000 kVA		2000 kVA	2000 kVA		2000 kVA	2000 kVA		2000 kVA
Load < 600 kVA	✓		✓			✓			✓	
600 kVA < Load < 1600 kVA		✓	✓			✓			✓	
1600 kVA < Load < 3200 kVA		✓	✓	✓		✓			✓	
3200 kVA < Load < 4800 kVA		✓	✓	✓	✓	✓			✓	
4800 kVA < Load < 6400 kVA		✓	✓	✓	✓		✓		✓	
6400 kVA < Load < 8000 kVA (Option 1)		✓	✓	✓	✓		✓	✓	✓	
6400 kVA < Load < 8000 kVA (Option 2)			✓	✓	✓		✓	✓	✓	✓
8000 kVA < Load < 9600 kVA		✓	✓	✓	✓		✓	✓	✓	✓

Load Description	DG Source				TR Source				Main LT Panel Phase 2 (DG or TR Source)		
	Phase 1 Changeover Panel-1		Phase 1 Changeover Panel-2		Phase 1 Changeover Panel-1		Phase 1 Changeover Panel-2				
	P1-C011	P1-C012	P1-C021	P1-C022	P1-C011	P1-C012	P1-C021	P1-C022	P2-LT1	P2-LT2	P2-LT-BC
Load < 600 kVA	✓					✓			✓		✓
600 kVA < Load < 1600 kVA	✓					✓			✓		✓
1600 kVA < Load < 3200 kVA	✓		✓			✓		✓	✓	✓	

PHASE - I

Load Description	DG Source				TR Source				Main LT Panel Phase 2 (DG or TR Source)		
	Phase 2 Changeover Panel-1		Phase 2 Changeover Panel-2		Phase 2 Changeover Panel-1		Phase 2 Changeover Panel-2				
	P2-C011	P2-C012	P2-C021	P2-C022	P2-C011	P2-C012	P2-C021	P2-C022	P2-LT1	P2-LT2	P2-LT-BC
Load < 600 kVA	✓					✓			✓		✓
600 kVA < Load < 1600 kVA	✓					✓			✓		✓
1600 kVA < Load < 3200 kVA	✓		✓			✓		✓	✓	✓	

PHASE - II

Load Description	DG Source				TR Source				Main LT Panel Phase III (DG or TR Source)		
	Phase 3 Changeover Panel-1		Phase 3 Changeover Panel-2		Phase 3 Changeover Panel-1		Phase 3 Changeover Panel-2				
	P3-C011	P3-C012	P3-C021	P3-C022	P3-C011	P3-C012	P3-C021	P3-C022	P3-LT1	P3-LT2	P3-LT-BC
Load < 600 kVA	✓					✓			✓		✓
600 kVA < Load < 1600 kVA	✓					✓			✓		✓
1600 kVA < Load < 3200 kVA	✓		✓			✓		✓	✓	✓	

PHASE - III

LEGEND:-

SNO.	SYM.	DESCRIPTION
01.	A	AMMETER
02.	V	VOLT METER
03.	PF	POWER FACTOR METER
04.	Hz	FREQUENCY METER
05.	KVH	KILOWATT HOUR METER
06.	KW	KILOWATT METER
07.	EEM	DUAL ELECTRONIC ENERGY METER
08.	FR	FIRE RETARDANT CABLE
09.	AS	AMMETER SELECTOR SWITCH
10.	VS	VOLTMETER SELECTOR SWITCH
11.	50,51,51N/N 51,50N	OVER CURRENT & EARTH FAULT RELAY
12.	50,51,50N,46,49	MULTI FUCTION RELAY
13.	86	LOCKOUT RELAY
14.	74	SUPERVISORY TRIP RELAY
15.	27	UNDER VOLTAGE DEVICE
16.	59	OVER VOLTAGE DEVICE
17.	46	CURRENT UNBALANCE
18.	87G,87	DIFFERENTIAL PROTECTION RELAY
19.	APFR	AUTOMATIC POWER FACTOR CORRECTION RELAY
20.	E	ELECTRICAL INTERLOCKING
21.	DG	DIESEL GENERATOR
22.	TR	TRANSFORMER
23.	EP	EARTHING PIT
24.	CF	CONTROL FUSE
25.	I	CURRENT TRANSFORMER
26.	TRM	TRIVECTOR METER
27.	●	INDICATING LAMP
28.	)	OVER LOAD RELAY
29.	⊥	POWER CONTACTOR
30.	PT	POTENTIAL TRANSFORMER
31.	ACB	AIR CIRCUIT BREAKER (ACB)
32.	VCB	VACUUM CIRCUIT BREAKER (VCB)
33.	⏚	GROUNDING
34.	MPR	MICRO PROCESSOR BASED RELEASE
35.	EEM	ELECTRONIC ENERGY METER
36.	MCCB	MOULDED CASE CIRCUIT BREAKER (MCCB)
37.	MCB	MINIATURE CIRCUIT BREAKER (MCB)
38.	87	DIFFERENTIAL PROTECTION RELAY
39.	32	REVERSE POWER DEVICE
40.	ELCB	EARTH LEAKAGE CIRCUIT BREAKER
41.		RESIDUAL CURRENT CIRCUIT BREAKER WITH OVERLOAD PROTECTION (RCBO)
42.		RESIDUAL CURRENT CIRCUIT BREAKER (RCCB)
43.	MPCB	MOTOR PROTECTION CIRCUIT BREAKER (MPCB)
44.	OLTC	ON LOAD TAP CHANGER
45.	E.D.O.	ELECTRICAL OPERATED (MANUAL DRAWOUT)
46.	49	THERMAL OVERLOAD RELAY
47.	40	LOSS OF EXCITATION RELAY
48.	37	UNDER POWER MONITOR/ALARM RELAY
49.	81	UNDER/OVER FREQUENCY RELAY
50.	64	RESTRICTED EARTH FAULT RELAY
51.	PCC3G	POWER COMMAND CONTROL (PCCM-3100 SYNCHRONIZING RELAY)
52.	PLC	PROGRAM LOGIC CONTROLLER
53.	AMF	AUTO MAINS FAILURE
54.	A/M	AUTO/ MANUAL SWITCH
55.	BC	BREAKER CONTROL
56.	●	HOOTER
57.	RPR	REVERSE POWER RELAY
58.	VSR	VOLTAGE SENSOR RELAY
59.	TVSS	TRANSIENT VOLTAGE SURGE SUPPRESSOR
60.	PSR	PHASE SEQUENCE RELAY
61.	ESS	ENGINE CRANKING RELAY
62.	●	PUSH BUTTON
63.	SC	24V DC SHUNT TRIP COIL
64.	VMFM	VOLT AMMETER FREQUENCY METER
65.	TS	TEMPERATURE SCANNER
66.	NC	NEUTRAL ISOLATING CONTACTOR
67.	NGR	NEUTRAL GROUNDING RESISTOR

NOTE:- CABLES TO BE AS PER FINAL CABLE SCHEDULE

SUBMISSION DRAWING

No.	Date	By	Description

ISSUES

No.	Date	By	Description

Revisions

Architects
Arcop Associates Pvt. Ltd.
36-B, Sector-32, Institutional Area, Gurgaon NCR, Delhi, India
Ph.: 0124-4595500 Fax : 0124-4595550

Structures
TPC
E-2, church complex sukhdev vihar new delhi
email :tpconsultants@gmail.com
tpconsultants@sify.com
Ph.: 91-11-41321401-02,03 26318650 Fax : 91-11-26910652

MEP CONSULTANT
AECOM
A-197, Sector-63 Noida 201301 Uttar Pradesh, India
T: +91 120 4049000 F: +91 120 4049001 www.aecom.com

Landscape
Samir Mathur
Integral Design
Landscape Architecture
E-90 Anand Niketan New Delhi,110021
email :integraldesigns@airtelmail.in
Ph:011-24678500, 501, 502 Fax:24678503

Developers
Indiabulls REAL ESTATE
Sector 103, Gurgaon Haryana, India
Selene Constructions Limited

Job Title
CENTRUM PARK
Near Gurgaon

Drawing Title
ELECTRICAL SINGLE LINE DIAGRAM

Job No.		Drawing No.
Drawn EA	Checked S.P	NODD11442-SHT--30-0000-1001
Date 20.05.2015	Scale NTS	Revisions 01