LC-5587

To be read with Licence No. 134 of 2025 Dated 04-08-2025.

That this layout plan for an area measuring 8.35 acres (Drawing no. DTCP-11308 Dated 05-08-25) comprised of license which is issued in respect of Affordable Plotted Colony (Under Deen Dayal Jan Awas Yojna-2016) being developed by VK and Sons Buildwell Pvt. Ltd. in collaboration with individual land owners in the revenue estate of Village Narhera, Sector-2 & 3, Pataudi, District-Gurugram is hereby approved subject to the following conditions:-

1. That this Layout Plan shall be read in conjunction with the clauses appearing on the agreement executed under Rule 11 and the bilateral agreement.
2. That the plotted area of the colony shall not exceed 65% of the net planned area of the colony. The entire area reserved for commercial purposes shall be taken as plotted for calculation of the area under plots.
3. That the demarcation plans as per site of all the Residential Plots and Commercial site shall be got approved from this Department and construction on these sites shall be governed by the Haryana Building Code, 2017 and the Zoning Plan approved by the Director, Town & Country Planning, Haryana.
4. That for proper planning and integration of services in the area adjacent to the colony, the colonizer shall abide by the directions of the DTCP for the modification of layout plans of the colony.
5. That the revenue rasta falling in the colony shall be kept free for circulation/movement as shown in the layout plan.
6. That the colonizer shall abide by the directions of the DTCP, Haryana and accordingly shall make necessary changes in the layout plan for making any adjustment in the alignment of the peripheral roads, internal road circulation or for proper integration of the planning proposals of the adjoining areas.
7. That no property/plot shall derive access directly from the carriage way of 30 metres or wider sector road if applicable.
8. All green belts provided in the layout plan within the licenced areas of the colony shall be developed by the colonizer. All other green belts outside the licenced area shall be developed by the Haryana Urban Development Authority/colonizer on the directions of the Director, Town and Country planning, Haryana or in accordance with terms and conditions of the agreements of the licence.
9. At the time of demarcation plan, if required percentage of organized open space is reduced, the same will be provided by the colonizer in the licenced area.
10. No plot will derive an access from less than 9 metres wide road would mean a minimum clear width of 9 metres between the plots.
11. Any excess area over and above the permissible 4% under commercial use shall be deemed to be open space.
12. The portion of the sector/development plan roads /green belts as provided in the Development Plan if applicable, which form part of the licensed area shall be transferred free of cost to the government on the lines of Section 3(3)(a)(iii) of the Act No.8 of 1975.
13. That the odd size plots are being approved subject to the conditions that these plots should not have a frontage of less than 75% of the standard frontage when demarcated.
14. That you will have no objection to the regularization of the boundaries of the licence through give and take with the land that HSVP is finally able to acquire in the interest of planned development and integration of services. The decision of the competent authority shall be binding in this regard.
15. That the rain water harvesting system shall be provided as per Central Ground Water Authority norms/Haryana Govt. notification as applicable.
16. That the colonizer/owner shall use only Light-Emitting Diode lamps (LED) fitting for internal lighting as well as Campus lighting.
17. That the colonizer/owner shall ensure the installation of Solar Power Plant as per provisions of Haryana Solar Power Policy, 2016 issued by Haryana Government Renewable Energy Department vide Notification No. 19/4/2016-5 Power dated 14.03.2016.
18. That the colonizer/owner shall ensure the installation of Solar Photovoltaic Power Plant as per the provisions of order No.22/52/2005-5Power dated 21.03.2016 issued by Haryana Government Renewable Energy Department.
19. That the colonizer/owner shall strictly comply with the directions issued vide Notification No. 19/6/2016-5P dated 31.03.2016 issued by Haryana Government Renewable Energy Department for enforcement of the Energy Conservation Building Codes.

(SANDEEP KUMAR) ATP(HQ) | (RAKESH BANSAL) DTP (HQ) | (VIJENDER SINGH) STP (HQ) | (BHUVNESH KUMAR) CTP(HR) | (AMIT KHATRI, IAS) DTCP (HR)

(PARVEEN KUMAR) SD(HQ)

PROJECT - VK AND SONS
SUBJECT : ROAD AREA

S. NO	ROAD NO	ROAD LENGTH IN M	ROAD WIDTH (CARPETED) IN M	AREA IN SQM	
1	1-2	58.00	5.50	319.0	
2	2-3	14.00	5.50	77.0	
3	3-4	34.00	5.50	187.0	
4	4-5	56.00	5.50	308.0	
5	5-6	106.00	5.50	583.0	
6	6-7	32.00	5.50	176.0	
7	6-8	92.00	5.50	506.0	
8	7-10	41.00	5.50	225.5	
9	8-9	32.00	5.50	176.0	
10	10-11	30.00	5.50	165.0	
11	11-12	86.00	5.50	473.0	
12	11-13	110.00	5.50	605.0	
13	**TOTAL**	**691.00**		**3800.5**	
ADD 5% FOR CURVES		34.55		190.0	
TOTAL		**725.55**		**3990.5**	
			SAY	**4000.0**	
LENGTH OF KERB STONE=725.55x2				**1451.1**	**RM**
SAY				**1460**	**RM**

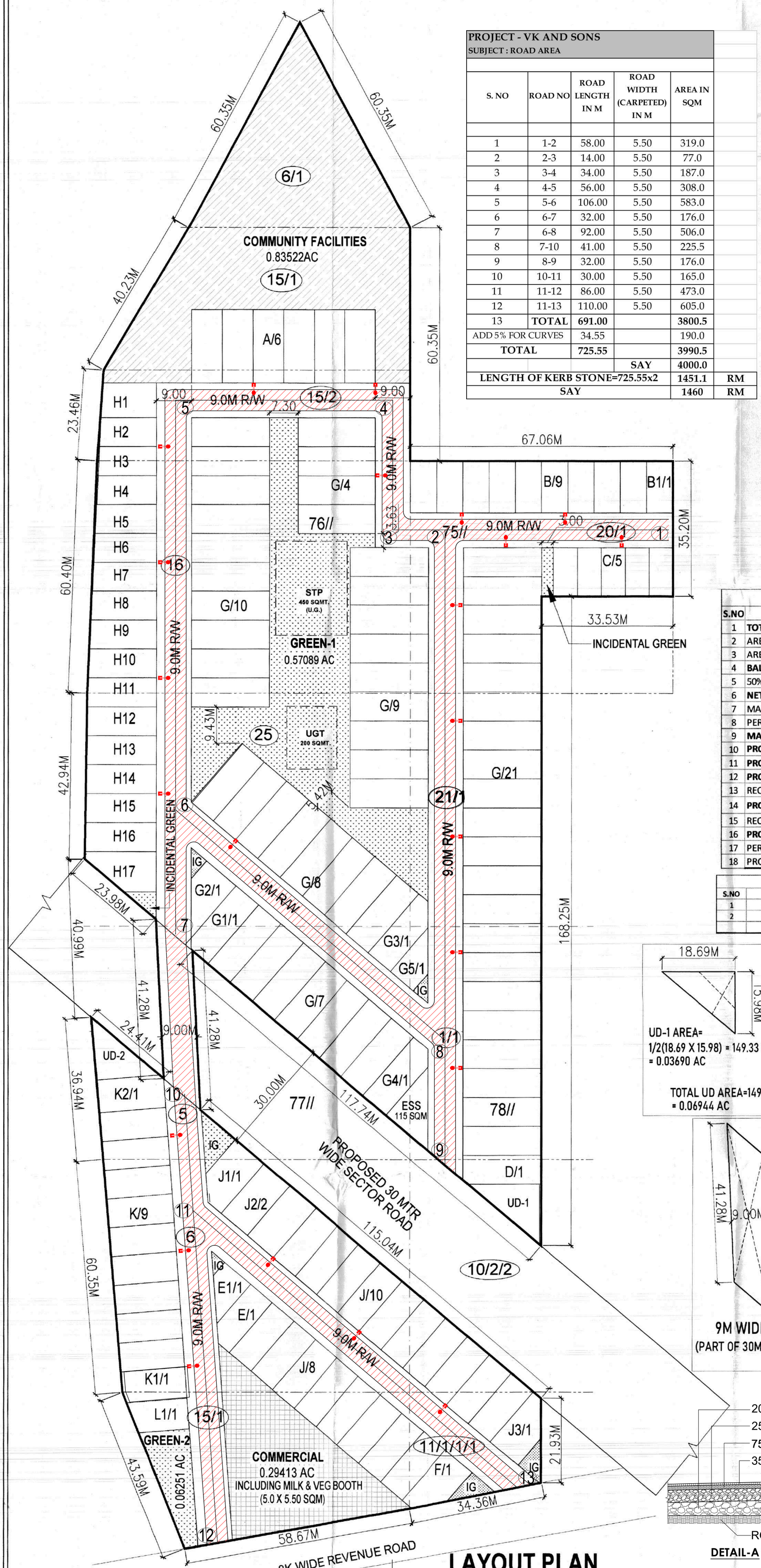

LAYOUT PLAN

AREA CALCULATION

S.NO	DISCRIPTION	%	AREA IN ACRE
1	**TOTAL SITE AREA**		**8.35000**
2	AREA UNDER 30.0 M WIDE SECTOR ROAD		0.09180
3	AREA UNDER UD		0.06944
4	**BALANCE AREA FOR PLANING**		**8.18876**
5	50% AREA BENEFIT OF 30.0 M WIDE SECTOR ROAD		0.04590
6	**NET PLANNED AREA**		**8.23466**
7	MAX. PERMISSIBLE AREA UNDER PLOTTING ON NET PLANNED AREA	61%	5.02314
8	PERMISSIBLE AREA UNDER COMMERCIAL ON NET PLANNED AREA	4%	0.32939
9	**MAX. PERMISSIBLE SALEABLE AREA**	**65%**	**5.35253**
10	**PROPOSED AREA UNDER PLOTTING**	**56.08%**	**4.61797**
11	**PROPOSED AREA UNDER COMMERCIAL**	**3.57%**	**0.29413**
12	**PROPOSED AREA UNDER PLOTING & COMMERCIAL**	**59.65%**	**4.91210**
13	REQUIRED AREA FOR COMMUNITY FACILITIES ON TOTAL SITE AREA	10%	0.83500
14	**PROVIDED AREA FOR COMMUNITY FACILITIES**	**10%**	**0.83522**
15	REQUIRED MIN. GREEN AREA ON TOTAL SITE AREA	7.5%	0.62625
16	**PROVIDED GREEN AREA**	**7.59%**	**0.63340**
17	PERMISSIBLE POPULATION	240-400	PERSONS
18	PROPOSED POPULATION (140X18)	2520	306 PERSONS/AC

GREEN AREA CALCULATION

S.NO	CODE	AREA IN SQM	AREA IN ACRE
1	GREEN-1	2310.310	0.57089
2	GREEN-2	252.973	0.06251
	TOTAL	**2563.283**	**0.63340**

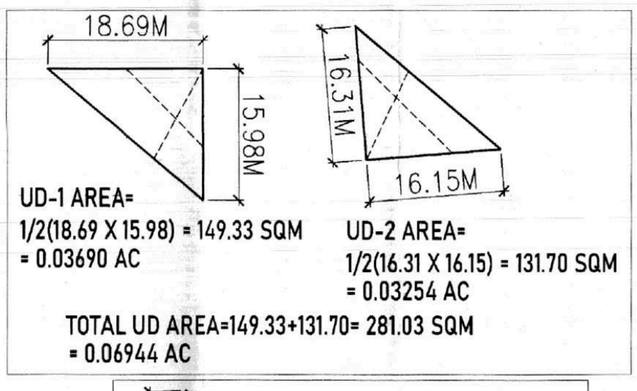

UD-1 AREA=
1/2(18.69 X 15.98) = 149.33 SQM
= 0.03690 AC

UD-2 AREA=
1/2(16.31 X 16.15) = 131.70 SQM
= 0.03254 AC

TOTAL UD AREA=149.33+131.70= 281.03 SQM
= 0.06944 AC

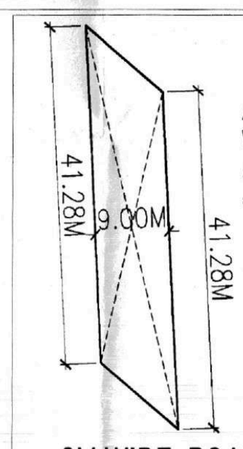

AREA UNDER 30 M WIDE SECTOR ROAD =
41.28 X 9.00 = 371.52 SQM
= 0.09180 AC

9M WIDE ROAD AREA
(PART OF 30M WIDE SECTOR ROAD)

PLOTS AREA CALCULATION

S.NO	TYPE	WIDTH IN M.	LENGTH IN M.	AREA IN SQM/PLOT	NO OF PLOTS.	TOTAL AREA. (SQM)
1	A	7.88	19.00	149.720	6	898.320
2	B	6.70	13.50	90.450	9	814.050
	B1	6.76	13.50	91.260	1	91.260
3	C	6.10	12.70	77.470	5	387.350
4	D	AS/PLAN		150.000	1	150.000
5	E	AS/PLAN		120.000	1	120.000
6	E1	AS/PLAN		77.000	1	77.000
7	F	AS/PLAN		132.000	1	132.000
8	G	7.50	20.00	150.000	59	8850.000
9	G1	AS/PLAN		150.000	1	150.000
10	G2	AS/PLAN		120.000	1	120.000
11	G3	AS/PLAN		150.000	1	150.000
12	G4	AS/PLAN		150.000	1	150.000
13	G5	AS/PLAN		80.000	1	80.000
14	H1	AS/PLAN		126.500	1	126.500
15	H2	AS/PLAN		110.073	1	110.073
16	H3	AS/PLAN		113.440	1	113.440
17	H4	AS/PLAN		116.194	1	116.194
18	H5	AS/PLAN		118.540	1	118.540
19	H6	AS/PLAN		120.702	1	120.702
20	H7	AS/PLAN		123.234	1	123.234
21	H8	AS/PLAN		125.500	1	125.500
22	H9	AS/PLAN		127.922	1	127.922
23	H10	AS/PLAN		130.272	1	130.272
24	H11	AS/PLAN		132.247	1	132.247
25	H12	AS/PLAN		133.421	1	133.421
26	H13	AS/PLAN		133.771	1	133.771
27	H14	AS/PLAN		134.506	1	134.506
28	H15	AS/PLAN		135.320	1	135.320
29	H16	AS/PLAN		136.457	1	136.457
30	H17	AS/PLAN		148.447	1	148.447
31	J1	AS/PLAN		150.000	1	150.000
32	J2	8.82	17.00	149.940	2	299.880
33	J3	AS/PLAN		132.500	1	132.500
34	J	7.33	17.00	124.610	18	2242.980
35	K	7.50	16.90	126.750	9	1140.750
36	K1	AS/PLAN		130.060	1	130.060
37	K2	AS/PLAN		145.030	1	145.030
38	L1	AS/PLAN		110.500	1	110.500
TOTAL					140	18688.226
				OR	4.61797	ACRE

LEGEND

	10% AREA OF TOTAL LAND FOR COMMUNITY FACILITIES
	COMMERCIAL AREA
	GREEN AREA

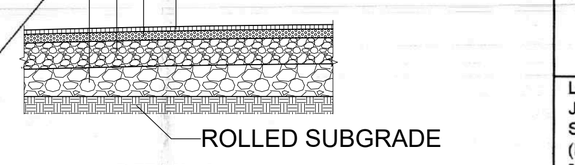

DETAIL-A

ROAD LAYOUT PLAN

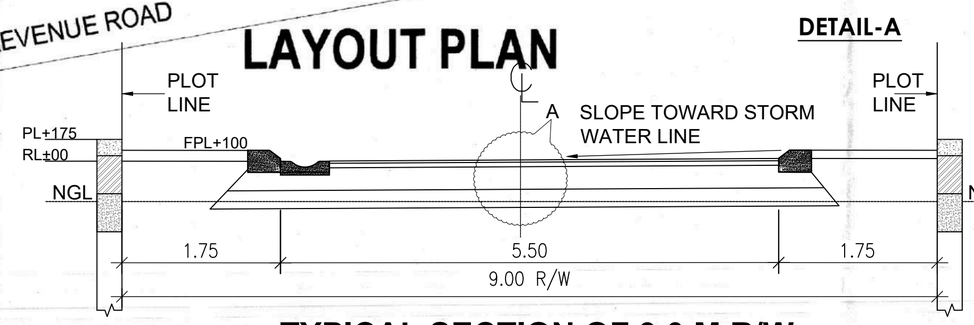

TYPICAL SECTION OF 9.0 M R/W

LEGEND

SYMBOL	DESCRIPTION
	STREET LIGHT

N W E S

05

ARCHITECTS
DAULAT & PUNEET ARCHITECTS LLP.
408, Fourth Floor, Sun City Trade Tower, Sector - 21, Gurugram - 122016,
E-MAIL: info@dnparchitects.com, Phone: +91-124-43766664
DnP ARCHITECTS LLP
Architecture Interior Planning Vastu

LAYOUT PLAN OF PLOTTED COLONY UNDER DEEN DAYAL JAN AWAS YOJNA LAND MEASURING **8.3500 ACRES** IN SECTOR-2 & 3, VILL. NARHERA, PATAUDI, DISTT-GURUGRAM, (HR)TO BE DEVELOPED BY
M/S VK & SONS BUILDWELL PVT.LTD.

TITLE :- **LAYOUT PLAN**

SCALE:- 1:500 | DATE:- 19-05-2025

VK & Sons Buildwell Pvt. Ltd.
Authorised Signatory
OWNER/AUTH. SIGN.

DAULAT & PUNEET ARCHITECTS LLP 4TH FL, SUN CITY TOWER GURUGRAM
DAULAT RAM GARG ARCHITECT CA/2001/20831
ARCHITECT'S SIGN.