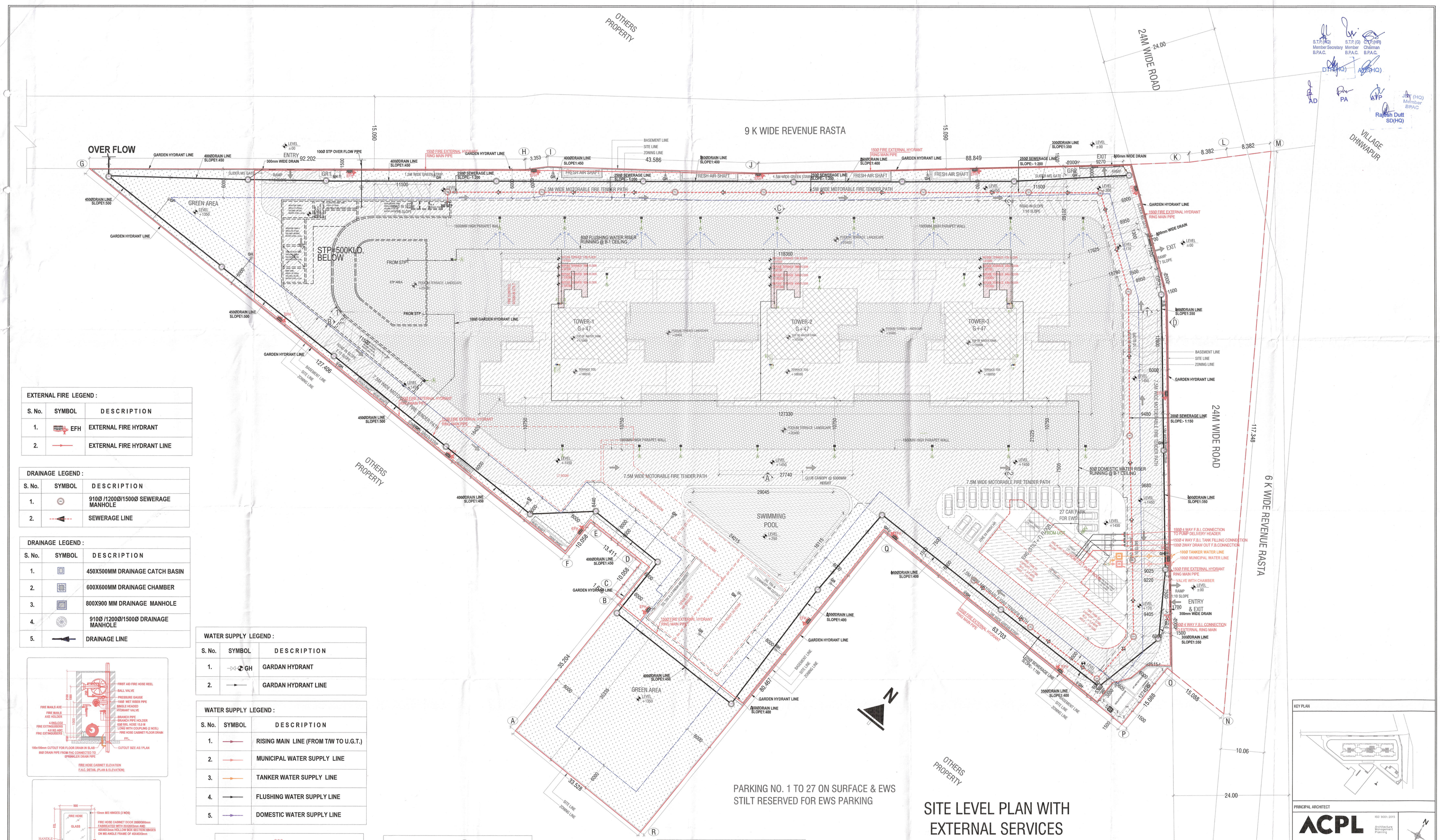


| EXTERNAL FIRE LEGEND : | | |
|---|---|---|
| S. No. | SYMBOL | DESCRIPTION |
| 1. | EFH | EXTERNAL FIRE HYDRANT |
| 2. | | EXTERNAL FIRE HYDRANT LINE |

| DRAINAGE LEGEND : | | |
|---|---|---|
| S. No. | SYMBOL | DESCRIPTION |
| 1. | | 910Ø /1200Ø/1500Ø SEWERAGE MANHOLE |
| 2. | | SEWERAGE LINE |

| DRAINAGE LEGEND : | | |
|---|---|---|
| S. No. | SYMBOL | DESCRIPTION |
| 1. | | 450X500MM DRAINAGE CATCH BASIN |
| 2. | | 600X600MM DRAINAGE CHAMBER |
| 3. | | 800X900 MM DRAINAGE MANHOLE |
| 4. | | 910Ø /1200Ø/1500Ø DRAINAGE MANHOLE |
| 5. | | DRAINAGE LINE |

| WATER SUPPLY LEGEND : | | |
|---|---|---|
| S. No. | SYMBOL | DESCRIPTION |
| 1. | GH | GARDAN HYDRANT |
| 2. | | GARDAN HYDRANT LINE |

| WATER SUPPLY LEGEND : | | |
|---|---|---|
| S. No. | SYMBOL | DESCRIPTION |
| 1. | | RISING MAIN LINE (FROM T/W TO U.G.T.) |
| 2. | | MUNICIPAL WATER SUPPLY LINE |
| 3. | | TANKER WATER SUPPLY LINE |
| 4. | | FLUSHING WATER SUPPLY LINE |
| 5. | | DOMESTIC WATER SUPPLY LINE |




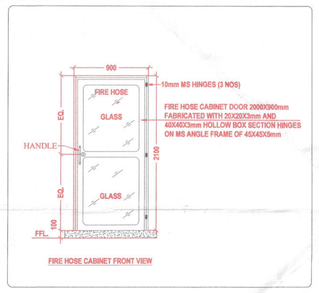


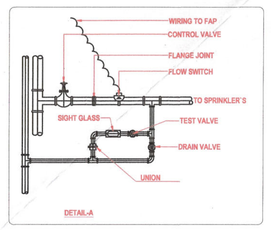


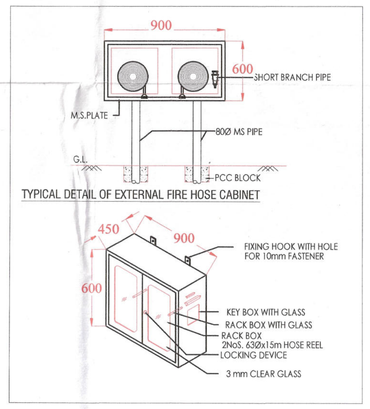


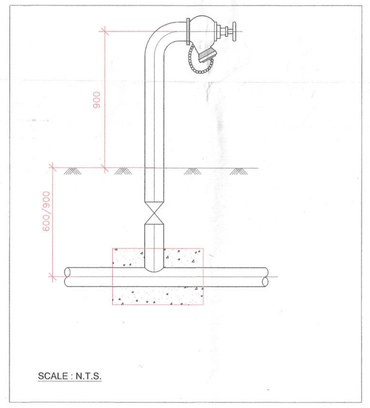


| PLUMBING LEGEND : | | |
|---|---|---|
| S. No. | SYMBOL | DESCRIPTION |
| 1. | A | 100Ø DRAINAGE PIPE |
| 2. | DP | DRAIN POINT |

| SYMBOL | DESCRIPTION |
|---|---|
| EFH | EXTERNAL FIRE HYDRANT C/C 45m |
| | 2 WAY FIRE DRAW OUTLET CONNECTION |
| | 4 WAY FIRE BRIDGE INLET CONNECTION |
| | EXTERNAL FIRE RING MAIN PIPE |

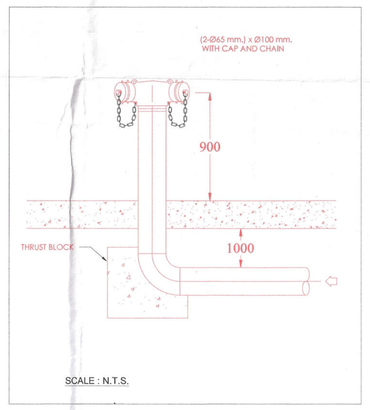


SANCTIONED
TO BE READ WITH THIS OFFICE
MEMO NO.: 3 2 585
DATED: 27.08.2025

S.T.P.(HQ) Member-Secretary B.P.A.C.
S.T.P. (G) Member B.P.A.C.
C.T.P.(HR) Chairman B.P.A.C.
DTP(HQ)
ATP(HQ)
AD
PA
ATP
JTP (HQ) Member BPAC
Rajesh Dutt SD(HQ)

KEY PLAN

PRINCIPAL ARCHITECT

ACPL Design Ltd
ISO 9001-2015
Architecture Interiors Planning
E-24 South Extension -II, +91 11 24622048
New Delhi 110049, India +91 11 24646708
www.acplonline.com E: contact@acplonline.com, +91 11 24624065

CLIENT
SV INFRA MANAGEMENT SOLUTIONS PRIVATE LIMITED.
(FORMERLY KNOWN AS SV INFRA MANAGEMENT SOLUTIONS LLP)

PROJECT
PROPOSED GROUP HOUSING COLONY UNDER MIXED LAND USE UNDER TOD POLICY, DATED 09.02.2018 (90% RESIDENTIAL COMPONENT + 2% COMMERCIAL COMPONENT) OVER AN AREA MEASURING 4.65625 ACRES (LOCKS NO. 140 OF 2024 DATED 11.11.2024 FALLING IN SECTOR-104, GURUGRAM BEING DEVELOPED BY SV INFRA MANAGEMENT SOLUTIONS PRIVATE LIMITED (FORMERLY KNOWN AS SV INFRA MANAGEMENT SOLUTIONS LLP)

Chief Town Planner (HQ) Town & Country Planning Engineer (HQ) HSVP, Panchkula

For SV Infra Management Solutions Private Ltd.
Authorised Signatory

KULMEET SHANGARI
ARCHITECT
CA/97/21741

OWNER/AUTH. SIGNATURE | ARCHITECT'S SIGNATURE

DRAWING TITLE
SITE LEVEL PLAN WITH EXTERNAL SERVICES

DRAWING NO. A-02 | SCALE : 1:250