This drawing is a "COPYRIGHT" contents of this drawing or part thereof may not be used or reproduced without the permission of the Architect.

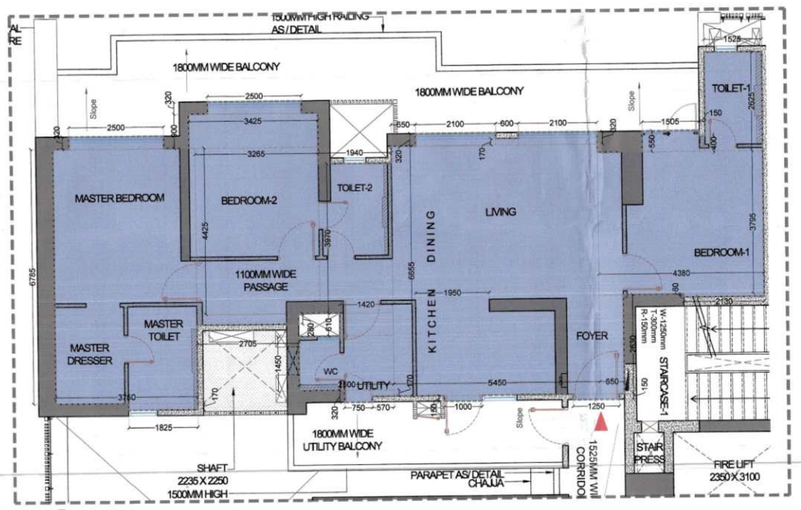

1 3BHK B- UNIT PLAN
1:75

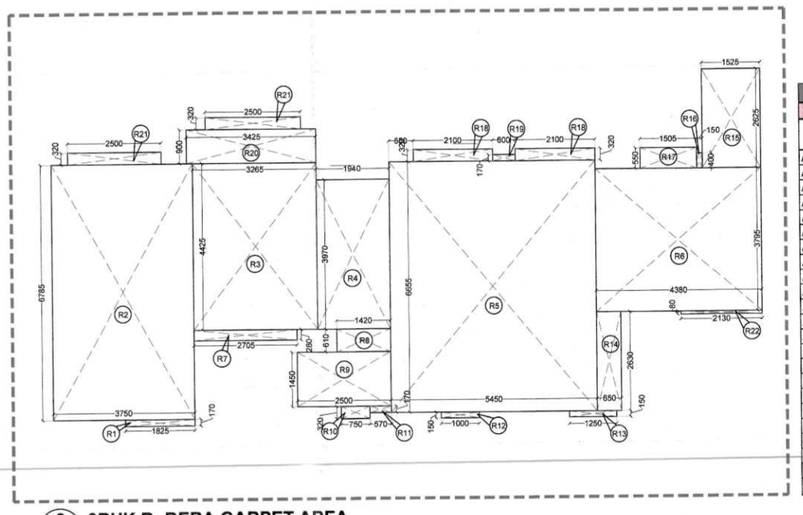

2 3BHK B- RERA CARPET AREA
1:75

3BHK B RERA CARPET AREA						
GROSS ADDITIONS(A)						
DESCRIPTION		LENGTH (mm)	BREADTH (mm)	AREA (sqm)	NO. OF FIGURES	TOTAL AREA (sqm)
Area of rectangle	R1	1825	170	0.310	1	0.310
Area of rectangle	R2	3750	6785	25.444	1	25.444
Area of rectangle	R3	3265	4425	14.448	1	14.448
Area of rectangle	R4	3970	1940	7.702	1	7.702
Area of rectangle	R5	6655	5450	36.270	1	36.270
Area of rectangle	R6	4380	3795	16.622	1	16.622
Area of rectangle	R7	2705	280	0.757	1	0.757
Area of rectangle	R8	1435	610	0.866	1	0.866
Area of rectangle	R9	2500	1450	3.625	1	3.625
Area of rectangle	R10	750	320	0.240	1	0.240
Area of rectangle	R11	570	170	0.097	1	0.097
Area of rectangle	R12	1000	150	0.150	1	0.150
Area of rectangle	R13	1250	150	0.188	1	0.188
Area of rectangle	R14	650	2630	1.710	1	1.710
Area of rectangle	R15	1525	2625	4.003	1	4.003
Area of rectangle	R16	150	400	0.060	1	0.060
Area of rectangle	R17	1505	550	0.828	1	0.828
Area of rectangle	R18	2100	320	0.672	2	1.344
Area of rectangle	R19	600	170	0.102	1	0.102
Area of rectangle	R20	3425	900	3.083	1	3.083
Area of rectangle	R21	2500	320	0.800	2	1.600
Area of rectangle	R22	2130	80	0.170	1	0.170
TOTAL RERA CARPET AREA - 3BHK B						119.62

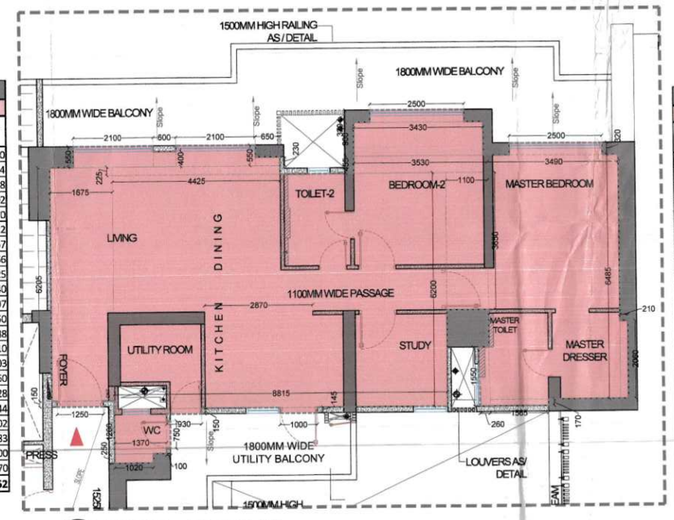

9 2BHK A - UNIT PLAN
1:75

2BHK A RERA CARPET AREA						
GROSS ADDITIONS(A)						
DESCRIPTION		LENGTH (mm)	BREADTH (mm)	AREA (sqm)	NO. OF FIGURES	TOTAL AREA (sqm)
Area of rectangle	R1	1370	1200	1.644	1	1.644
Area of rectangle	R2	1250	150	0.188	1	0.188
Area of rectangle	R3	1675	6205	10.393	1	10.393
Area of rectangle	R4	2100	550	1.155	2	2.310
Area of rectangle	R5	600	400	0.240	1	0.240
Area of rectangle	R6	650	230	0.150	1	0.150
Area of rectangle	R7	4425	225	0.996	1	0.996
Area of rectangle	R8	3730	3795	14.155	1	14.155
Area of rectangle	R9	8815	6200	54.653	1	54.653
Area of rectangle	R10	3530	455	1.606	1	1.606
Area of rectangle	R11	3430	900	3.087	1	3.087
Area of rectangle	R12	2500	320	0.800	2	1.600
Area of rectangle	R13	1100	3650	4.015	1	4.015
Area of rectangle	R14	3490	6485	22.633	1	22.633
Area of rectangle	R15	210	2060	0.433	1	0.433
Area of rectangle	R16	1565	170	0.266	1	0.266
Area of rectangle	R17	260	1550	0.403	1	0.403
Area of rectangle	R18	1000	145	0.145	1	0.145
Area of rectangle	R19	930	150	0.140	1	0.140
Area of rectangle	R20	100	750	0.075	1	0.075
GROSS DEDUCTION(B)						
Area of rectangle	S1	1270	600	0.762	1	0.762
TOTAL RERA CARPET AREA - 2BHK A :(A-B)						104.57

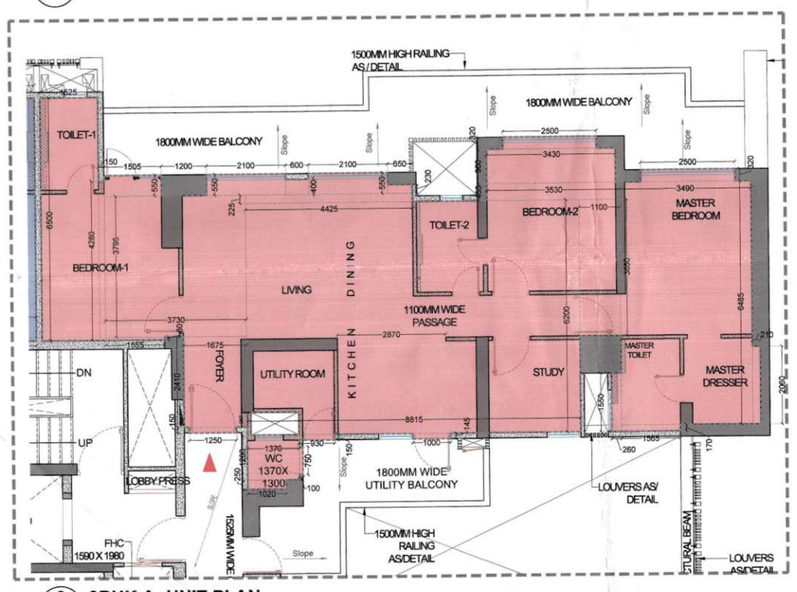

3 3BHK A- UNIT PLAN
1:75

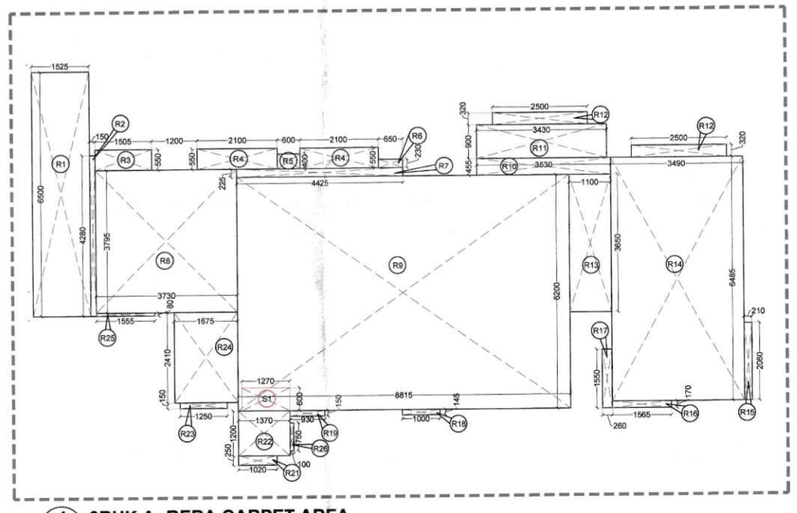

4 3BHK A- RERA CARPET AREA
1:75

3BHK A RERA CARPET AREA						
GROSS ADDITIONS(A)						
DESCRIPTION		LENGTH (mm)	BREADTH (mm)	AREA (sqm)	NO. OF FIGURES	TOTAL AREA (sqm)
Area of rectangle	R1	1525	6500	9.913	1	9.913
Area of rectangle	R2	150	4280	0.642	1	0.642
Area of rectangle	R3	1505	550	0.828	1	0.828
Area of rectangle	R4	2100	550	1.155	2	2.310
Area of rectangle	R5	600	400	0.240	1	0.240
Area of rectangle	R6	650	230	0.150	1	0.150
Area of rectangle	R7	4425	225	0.996	1	0.996
Area of rectangle	R8	3730	3795	14.155	1	14.155
Area of rectangle	R9	8815	6200	54.653	1	54.653
Area of rectangle	R10	3530	455	1.606	1	1.606
Area of rectangle	R11	3430	900	3.087	1	3.087
Area of rectangle	R12	2500	320	0.800	1	0.800
Area of rectangle	R13	1100	3650	4.015	1	4.015
Area of rectangle	R14	3490	6485	22.633	1	22.633
Area of rectangle	R15	210	2060	0.433	1	0.433
Area of rectangle	R16	1565	170	0.266	1	0.266
Area of rectangle	R17	260	1550	0.403	1	0.403
Area of rectangle	R18	1000	145	0.145	1	0.145
Area of rectangle	R19	930	150	0.140	1	0.140
Area of rectangle	R20	100	750	0.075	1	0.075
Area of rectangle	R21	1020	250	0.255	1	0.255
Area of rectangle	R22	1370	1200	1.644	1	1.644
Area of rectangle	R23	1250	150	0.188	1	0.188
Area of rectangle	R24	1675	2410	4.037	1	4.037
Area of rectangle	R25	1555	80	0.124	1	0.124
Area of rectangle	R26	100	750	0.075	1	0.075
GROSS DEDUCTION(B)						
Area of rectangle	S1	1270	600	0.762	1	0.762
TOTAL RERA CARPET AREA - 3BHK A :(A-B)						123.85

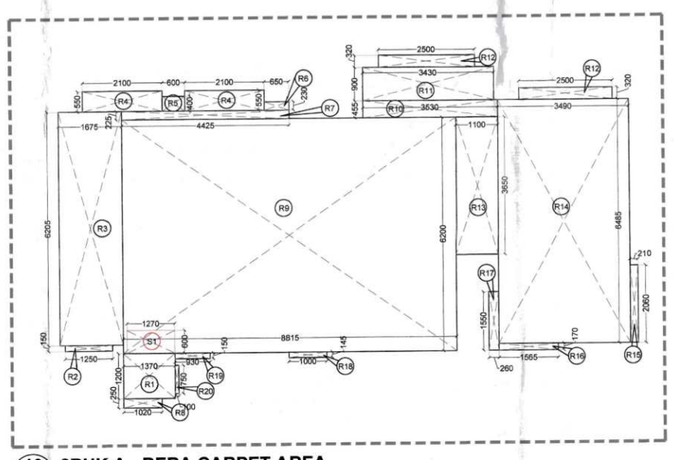

10 2BHK A - RERA CARPET AREA
1:75

TA- TYPICAL FLOOR - KEY PLAN

TA- REFUGE FLOOR - KEY PLAN

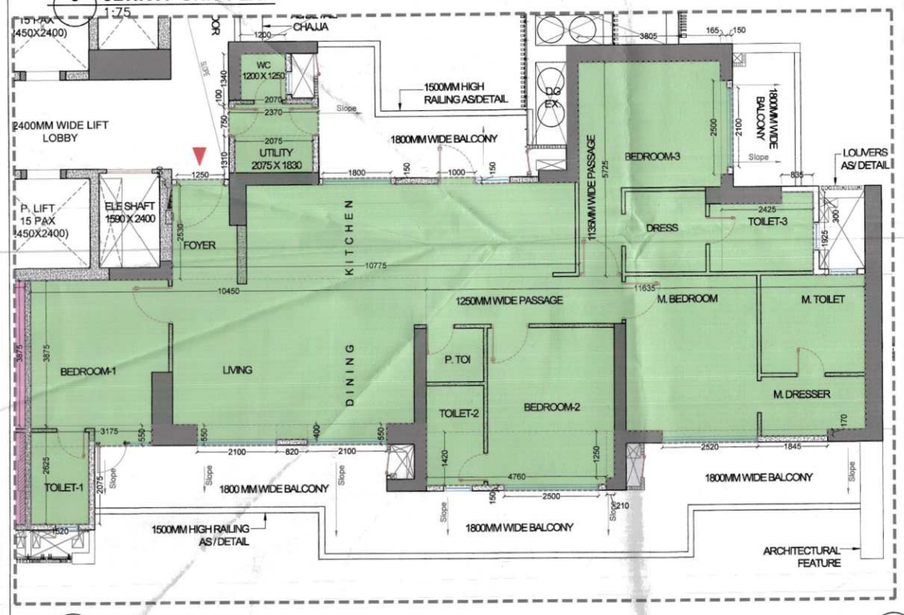

5 4BHK - UNIT PLAN
1:75

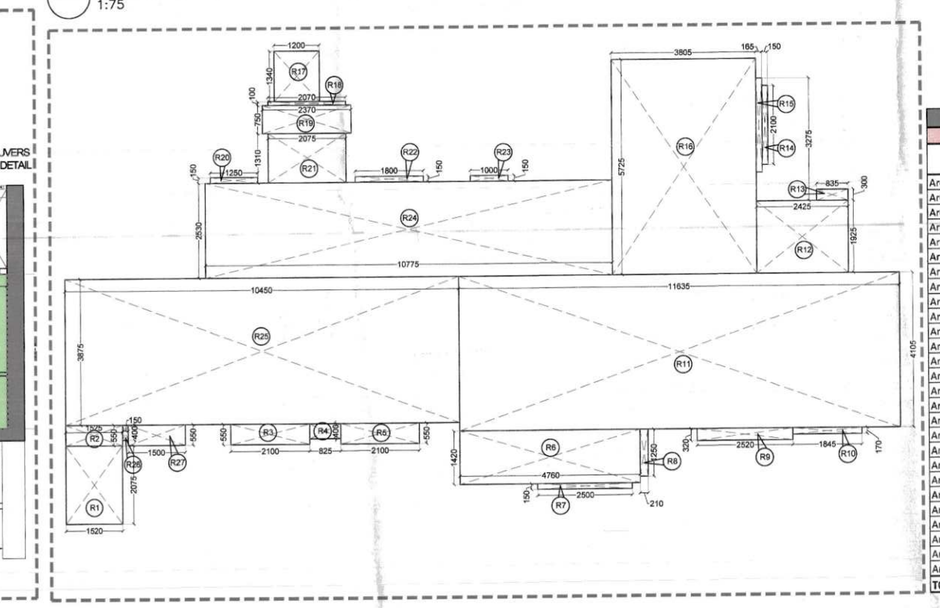

6 4BHK - RERA CARPET AREA
1:75

4BHK RERA CARPET AREA						
GROSS ADDITIONS(A)						
DESCRIPTION		LENGTH (mm)	BREADTH (mm)	AREA (sqm)	NO. OF FIGURES	TOTAL AREA (sqm)
Area of rectangle	R1	1520	2075	3.154	1	3.154
Area of rectangle	R2	1525	550	0.839	1	0.839
Area of rectangle	R3	2100	550	1.155	1	1.155
Area of rectangle	R4	825	400	0.330	1	0.330
Area of rectangle	R5	2100	550	1.155	1	1.155
Area of rectangle	R6	4760	1420	6.759	1	6.759
Area of rectangle	R7	2500	150	0.375	1	0.375
Area of rectangle	R8	210	1250	0.263	1	0.263
Area of rectangle	R9	2520	320	0.806	1	0.806
Area of rectangle	R10	1845	170	0.314	1	0.314
Area of rectangle	R11	11635	4105	47.762	1	47.762
Area of rectangle	R12	2425	1925	4.668	1	4.668
Area of rectangle	R13	835	300	0.251	1	0.251
Area of rectangle	R14	2100	150	0.315	1	0.315
Area of rectangle	R15	2500	165	0.413	1	0.413
Area of rectangle	R16	3805	5725	21.784	1	21.784
Area of rectangle	R17	1200	1340	1.608	1	1.608
Area of rectangle	R18	2070	100	0.207	1	0.207
Area of rectangle	R19	2370	750	1.778	1	1.778
Area of rectangle	R20	1250	150	0.188	1	0.188
Area of rectangle	R21	2075	1310	2.718	1	2.718
Area of rectangle	R22	1800	150	0.270	1	0.270
Area of rectangle	R23	1000	150	0.150	1	0.150
Area of rectangle	R24	10775	2530	27.261	1	27.261
Area of rectangle	R25	10450	3875	40.494	1	40.494
Area of rectangle	R26	150	400	0.060	1	0.060
Area of rectangle	R27	1500	550	0.825	1	0.825
TOTAL RERA CARPET AREA - 4BHK -'A'						165.90

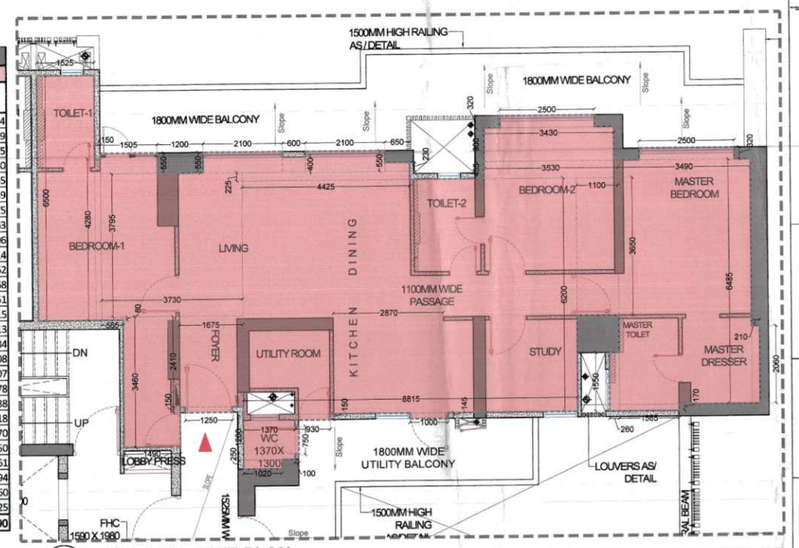

11 3BHK (SP) - UNIT PLAN
1:75

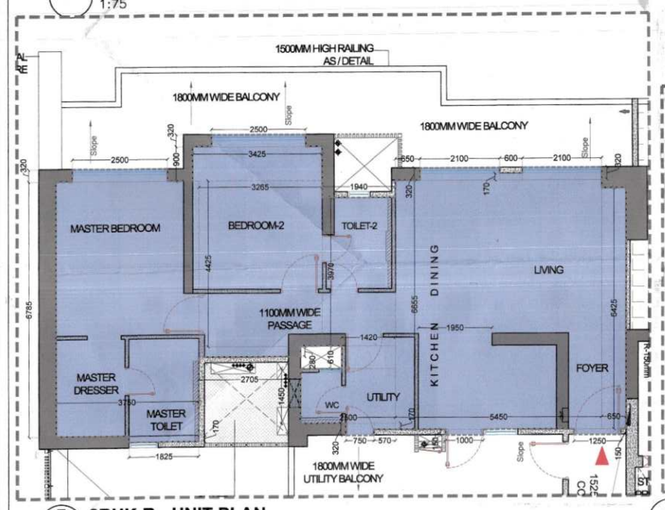

7 2BHK B - UNIT PLAN
1:75

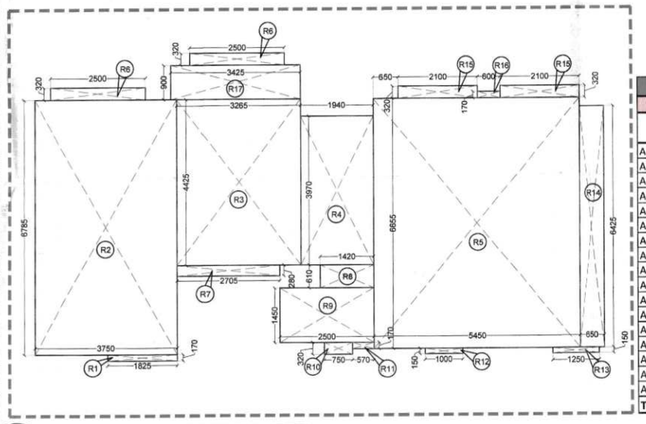

8 2BHK B - RERA CARPET AREA
1:75

2BHK B RERA CARPET AREA						
GROSS ADDITIONS(A)						
DESCRIPTION		LENGTH (mm)	BREADTH (mm)	AREA (sqm)	NO. OF FIGURES	TOTAL AREA (sqm)
Area of rectangle	R1	1825	170	0.310	1	0.310
Area of rectangle	R2	3750	6785	25.444	1	25.444
Area of rectangle	R3	3265	4425	14.448	1	14.448
Area of rectangle	R4	3970	1940	7.702	1	7.702
Area of rectangle	R5	6655	5450	36.270	1	36.270
Area of rectangle	R6	2500	320	0.800	2	1.600
Area of rectangle	R7	2705	280	0.757	1	0.757
Area of rectangle	R8	1420	610	0.866	1	0.866
Area of rectangle	R9	2500	1450	3.625	1	3.625
Area of rectangle	R10	750	320	0.240	1	0.240
Area of rectangle	R11	570	170	0.097	1	0.097
Area of rectangle	R12	1000	150	0.150	1	0.150
Area of rectangle	R13	1250	150	0.188	1	0.188
Area of rectangle	R14	650	6425	4.176	1	4.176
Area of rectangle	R15	2100	320	0.672	2	1.344
Area of rectangle	R16	600	170	0.102	1	0.102
Area of rectangle	R17	3425	900	3.083	1	3.083
TOTAL RERA CARPET AREA - 2BHK B						100.40

SANCTIONED
TAKEN ON RECORD WITH THIS OFFICE
MEMO No. 2462
DATED 20-01-2026

3BHK SP RERA CARPET AREA						
GROSS ADDITIONS(A)						
DESCRIPTION		LENGTH (mm)	BREADTH (mm)	AREA (sqm)	NO. OF FIGURES	TOTAL AREA (sqm)
Area of rectangle	R1	1525	6500	9.913	1	9.913
Area of rectangle	R2	150	4280	0.642	1	0.642
Area of rectangle	R3	1505	550	0.828	1	0.828
Area of rectangle	R4	2100	550	1.155	2	2.310
Area of rectangle	R5	600	400	0.240	1	0.240
Area of rectangle	R6	650	230	0.150	1	0.150
Area of rectangle	R7	4425	225	0.996	1	0.996
Area of rectangle	R8	3730	3795	14.155	1	14.155
Area of rectangle	R9	8815	6200	54.653	1	54.653
Area of rectangle	R10	3530	455	1.606	1	1.606
Area of rectangle	R11	3430	900	3.087	1	3.087
Area of rectangle	R12	2500	320	0.800	1	0.800
Area of rectangle	R13	1100	3650	4.015	1	4.015
Area of rectangle	R14	3490	6485	22.633	1	22.633
Area of rectangle	R15	210	2060	0.433	1	0.433
Area of rectangle	R16	1565	170	0.266	1	0.266
Area of rectangle	R17	260	1550	0.403	1	0.403
Area of rectangle	R18	1000	145	0.145	1	0.145
Area of rectangle	R19	930	150	0.140	1	0.140
Area of rectangle	R20	100	750	0.075	1	0.075
Area of rectangle	R21	1020	250	0.255	1	0.255
Area of rectangle	R22	1370	1200	1.644	1	1.644
Area of rectangle	R23	1250	150	0.188	1	0.188
Area of rectangle	R24	1675	2410	4.037	1	4.037
Area of rectangle	R25	565	80	0.045	1	0.045
Area of rectangle	R26	1490	3460	5.155	1	5.155
TOTAL RERA CARPET AREA - 3BHK SP -'A'						128.81

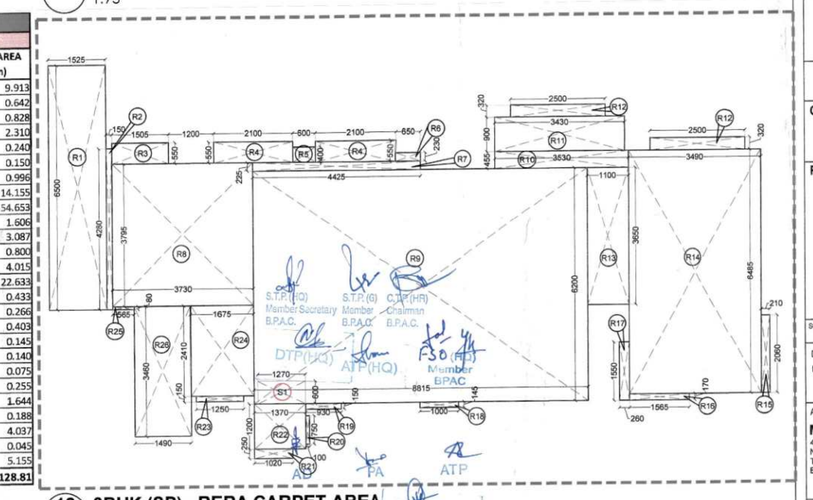

12 3BHK (SP) - RERA CARPET AREA
1:75

S.P.(HQ) Member Secretary DTP(HQ) BPAC
STA(HQ) Member BPAC
CATP(HQ) Chairman BPAC
ATP(HQ) Member BPAC
SO (HQ) Member BPAC
TA
ATP
Rajesh Dutt SD(HQ)

TA- SERVICE PERSONNEL - KEY PLAN

OWNER SIGN

ARCHITECT SIGN
REENA SHARMA
B.ARCH
CA/2016/77247

KEY PLAN

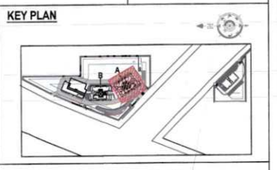

SUBMISSION DRAWING

OWNER
M/S RADHEY BUILDHOME PVT. LTD. IN COLLABORATION WITH M/S ADANI M2K REALTORS LLP.

PROJECT
PROPOSED RESIDENTIAL GROUP HOUSING COLONY OVER AN ADDITIONAL AREA MEASURING 0.03125 ACRE (LICENSE NO 131 OF 2025 DATED 29-07-2025) ADJOINING TO ALREADY LICENCED AREA MEASURING 5.13125 ACRES (AFTER MIGRATION OF 12.05625 ACRES INTO RESIDENTIAL PLOTTED COLONY UNDER DDJAY-2016 LICENSE NO-44OF 2021 DATED 12.08.2021 OUT OF TOTAL 17.9875 ACRES UNDER LICENCE NO. 24 OF 2012) TOTAL AREA MEASURING 5.1625 ACRES IN SECTOR 102 & 102-A, GURUGRAM

SCALE 1:75
DATE 17.11.2025

DRAWING TITLE
UNIT RERA CARPET AREAS

ARCHITECTS
MORPHOGENESIS.
41, INDUSTRIAL ESTATE, OKHLA PHASE-III, NEW DELHI 110020. INDIA
TEL: +91 11 41626070
E MAIL: STUDIO@MORPHOGENESIS.ORG

DRAWING NO. S-27
REVISION