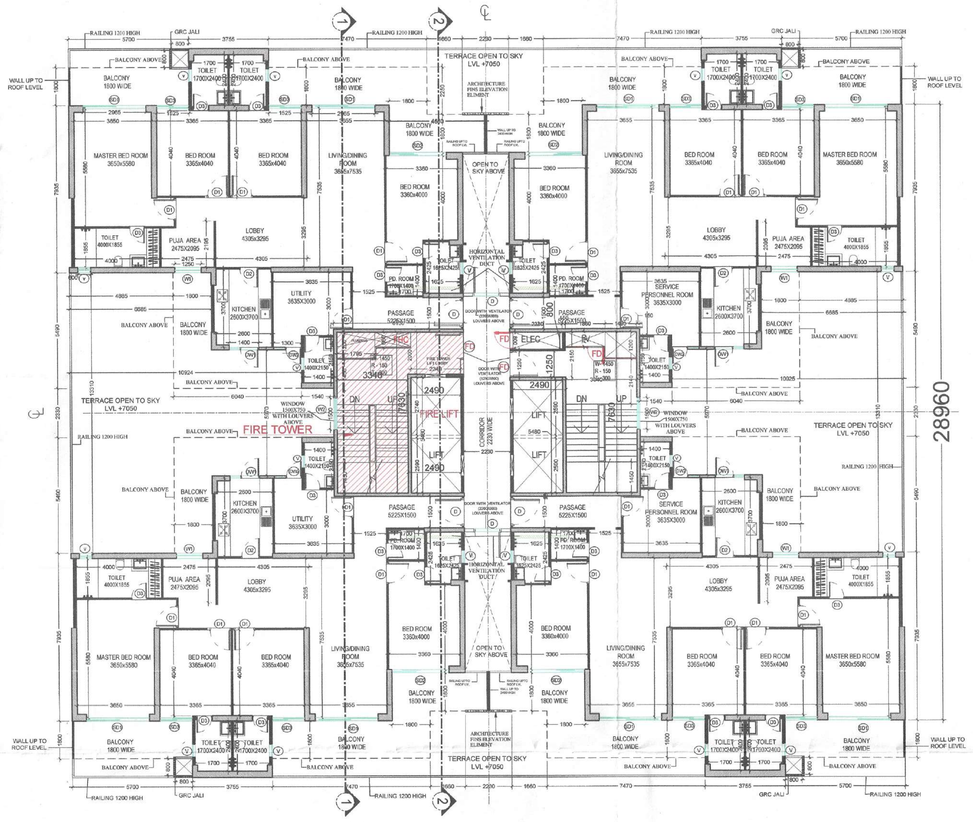

1ST FLOOR PLAN TOWER - D
SERVICE PERSONNEL UNIT

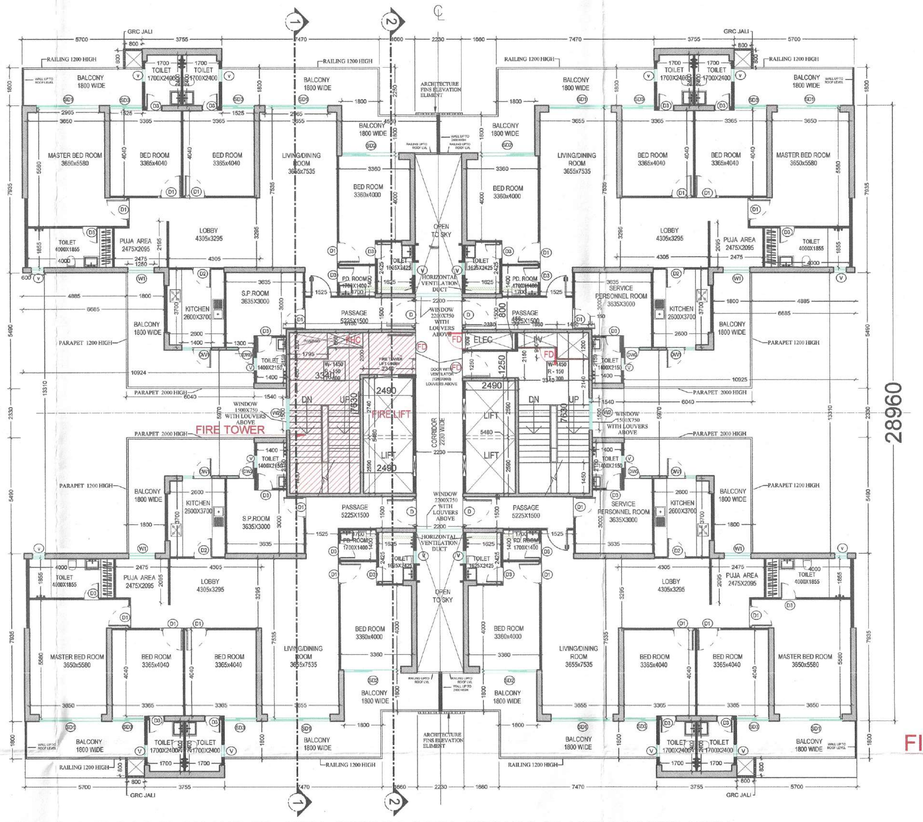

TYPICAL FLOOR PLAN 2ND TO 15TH, 17TH TO 24TH, 26TH TO 32 AND 34TH TO 37TH
TOWER -D (SERVICE PERSONAL)

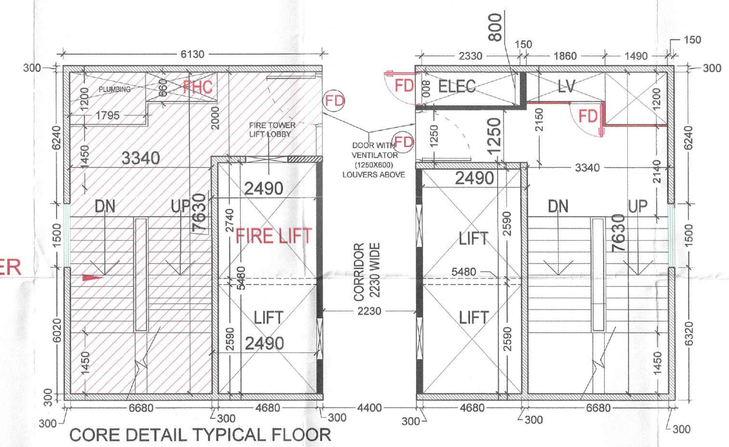

CORE DETAIL TYPICAL FLOOR

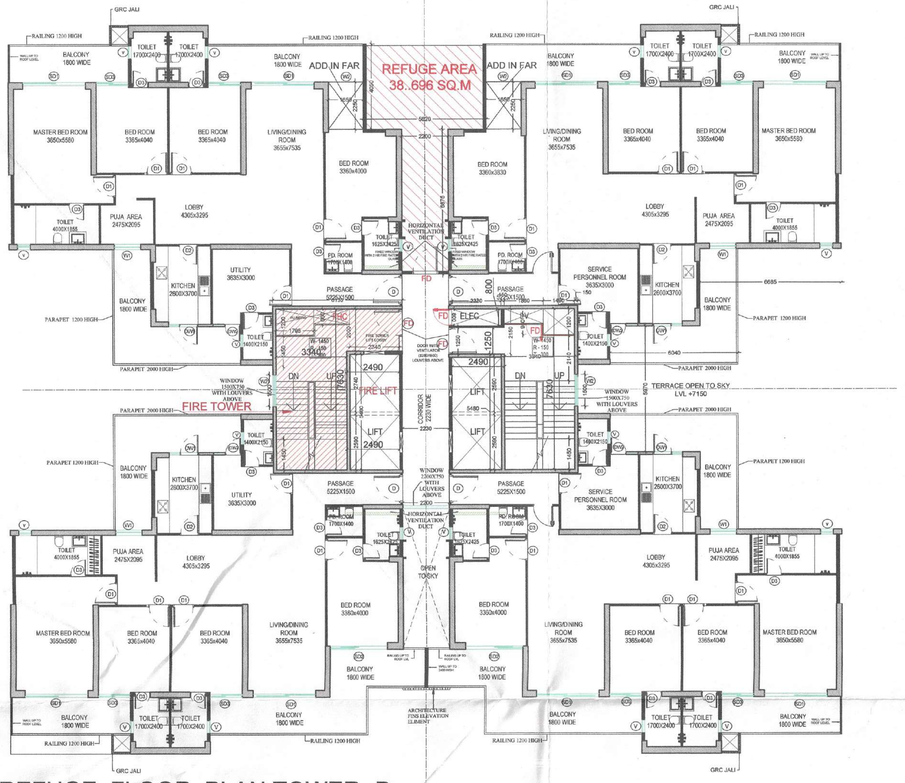

REFUGE FLOOR PLAN TOWER -D
16TH ,25TH &33RD
LVL + 61050, 93450 & 122250,

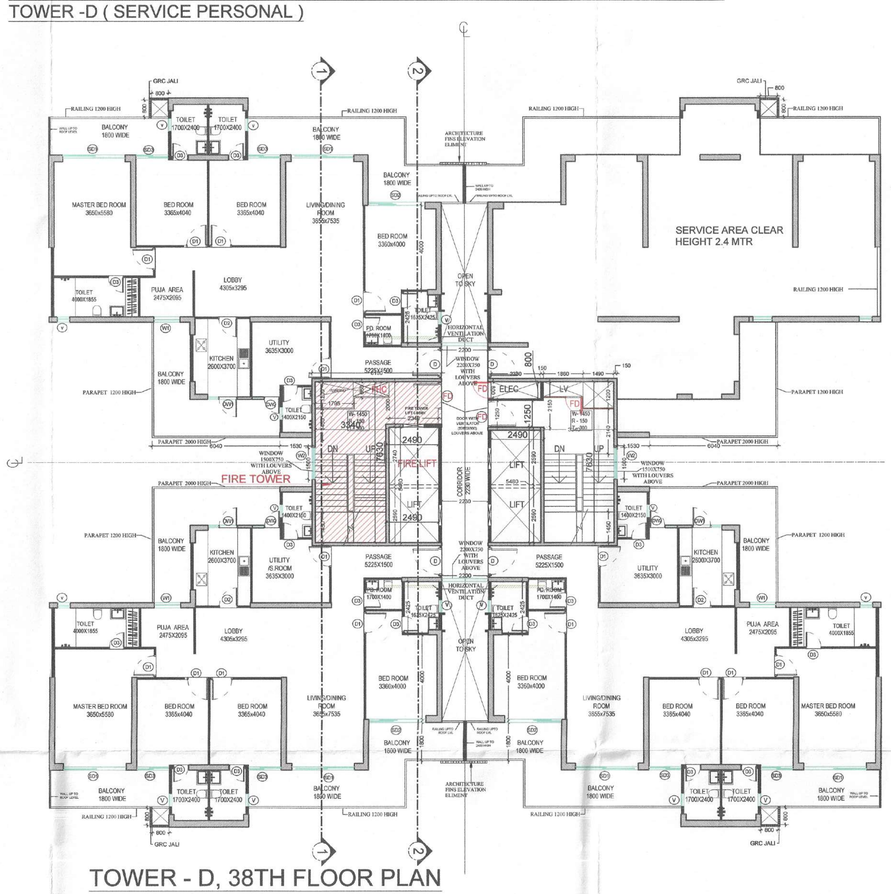

TOWER - D, 38TH FLOOR PLAN

AREA CHART FOR BLOCK -D						
F.A.R DETAIL	F.A.R OF TYPICAL FLOOR	NO OF UNITS ON EACH FLOOR	NO OF FLOORS	NO OF TOWERS	TOTAL NO. OF UNITS	TOTAL AREA
AREA 2ND TO 15TH, 17TH TO 24TH, 26TH TO 32 (TYPICAL) 34TH TO 37TH Floor	782.428	4	34	1	136	26602.55
AREA 16TH, 25TH & 33RD FLOOR (REFUGE)	789.853	4	3	1	12	2369.56
AREA ON 38TH FLOOR	594.869	3	1	1	3	594.87
TOTAL F.A.R. OF TOWER						29566.98
TOTAL NO OF UNITS IN TOWER					151	
NET F.A.R. ALL BLOCKS (TOWER A, B, C & D						29566.98
TOTAL NO OF DU'S						607.00

F.A.R. CALCULATION BLOCK -D						
F.A.R. AREA UP TO 37 TH FLOOR SAME AS TOWER A,B & C					782.428	SQ.M
F.A.R. AT 38TH FLOOR TYPICAL FLOOR F.A.R - SERVICE AREA						
AREA UNDER SERVICE UNIT						
	1	3.780	2.700	1	10.206	SQ.M
	2	15.125	7.935	1	120.017	SQ.M
	3	3.460	8.375	1	28.978	SQ.M
	4	2.670	2.690	1	7.182	SQ.M
	5	5.770	3.670	1	21.176	SQ.M
AREA UNDER SERVICE FLOOR					187.559	SQ.M
NET F.A.R. ON 38TH FLOOR OF TOWER -D (TYPICAL FLOOR - SERVICE AREA)					594.869	SQ.M

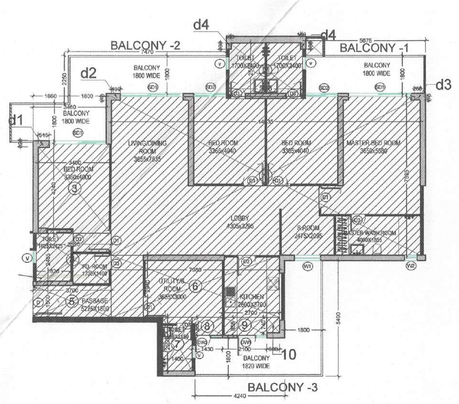

TYPICAL UNIT CARPET AREA PLAN

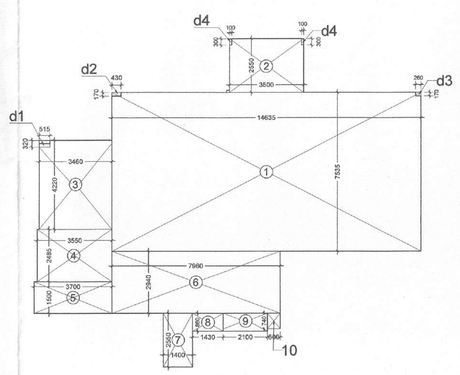

TYPICAL UNIT CARPET
AREA DIAGRAM

MAIN UNIT CARPET AREA CALCULATION					
ADDTIONS					
S. No.	COEFF.	WIDTH	LENGHT	NOS.	AREA IN SQMT
1	1	14.635	7.535	1	110.275
2	1	3.500	2.550	1	8.925
3	1	3.460	4.240	1	14.670
4	1	3.550	2.485	1	8.822
5	1	3.700	1.500	1	5.550
6	1	7.960	2.940	1	23.402
7	1	1.400	2.550	1	3.570
8	1	1.430	0.860	1	1.230
9	1	2.100	0.860	1	1.806
10	1	0.600	0.740	1	0.444
TOTAL ADDTIONS				=	178.69
DEDUCTIONS					
d1	1	0.515	0.320	1	0.165
d2	1	0.430	0.170	1	0.073
d3	1	0.260	0.170	1	0.044
d4	1	0.100	0.300	2	0.030
d5	1	0.515	0.170	1	0.088
TOTAL DEDUCTIONS (D1)				=	0.400
NET AREA = (A1-D1)				=	178.29

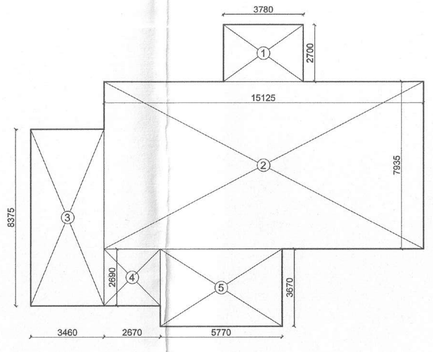

SERVICE UNIT AREA DIAGRAM

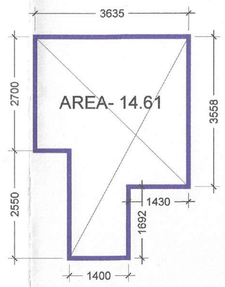

SERVICE PERSONNEL ROOM
AREA DIAGRAM

DOOR & WINDOW OPENING SCHEDULE					
SN.	TYPE	WIDTH	SILL	LINTEL	REMARK
1	FD	1250	00	2700	2HR. FIRE RATED
2	D	1300	00	2700	1HR. FIRE RESITANT
3	D1	1000	00	2700	ALL BED ROOM
4	D2	900	00	2700	ALL KITCHEN
5	D3	750	00	2700	ALL TOILET
6	DW1	1400	00	2400	ALL KITCHEN BALCONY
7	DW2	1300	00	2400	ROOM BALCONY
8	SD1	2965	00	2700	ALL MASTER, LIVING ROOM BALCONY
9	SD2	2700	00	2700	BED ROOM BALCONY
10	SD3	1525	00	2700	BED ROOM BALCONY
11	SD4	1650	00	2700	BED ROOM BALCONY
12	W1	1250	900	2700	ALL STUDY
13	W2	1500	900	2700	ALL STAIR

S.T.P (HQ) Member Secretary B.P.A.C. — S.T.P.(G) Member B.P.A.C. — C.T.P.(HR) Chairman B.P.A.C.
DTP(HQ) — ATP(HQ) — JD. — P.A. — A.T.P
JD (T) MEMBER BPAC
SANCTIONED
TO BE READ WITH THIS OFFICE MEMO NO.:
DATED :
DINESH KUMAR PA(HQ)

NOTES
1. THIS DRAWING IS THE PROPERTY OF ARCHITECTS AND IS NOT TO BE USED FOR ANY OTHER PURPOSE THAN FOR WHICH IT WAS ISSUED.
2. THIS DRAWING IS NOT TO BE REPRODUCED, TRACED OR COPIED WITHOUT THE PRIOR PERMISSION OF THE ARCHITECTS
3. ALL DIMENSIONS MUST BE VERIFIED IN THE DRAWING & AT SITE BEFORE COMMENCEMENT OF WORK.
4. ONLY WRITTEN DIMENSIONS ARE TO BE FOLLOWED. DRG. IS NOT TO BE SCALED.
5. ANY DESCREPANCIES FOUND IN THE DRAWING SHALL BE BROUGHT TO THE NOTICE OF THE ARCHITECT IMMEDIATELY BEFORE EXECUTION.

KEY PLAN

S.No.	DATE	REVISION DETAILS

REVISIONS

S.No.	DATE	NO. OF PRINTS	REMARKS

ISSUED

PROJECT
APPROVAL OF BUILDING PLANS FOR PROPOSED RESIDENTIAL GROUP HOUSING COLONY UNDER TOD SCHEME AREA MEASURING 7.50 ACRES LAND AT SECTOR 70, GURUGRAM, HARYANA UNDER LICENSE NO. 158 OF 2024 DATED 17.11.2024 BEING DEVELOPED BY PREMIUM I N F R A T E C H L L P
OWNER: PREMIUM INFRATECH LLP

For PREMIUM INFRATECH LLP
Authorised Signatory
DIRECTOR

Checked and found ok for Public Health (Internal) Service only subject to comments in in forwarding letter No. ..... Dt. .....
Superintending Engineer (HQ)
Chief Engineer-I
HSVP, Panchkula

ARCHITECT
Design Axis architects
1 DAV, KAB BIGH FARM HOUSES, CHHATTAR MEAR, AIDHUN BIGHA, NEW DELHI-110030
EMAIL: designaxis2015@gmail.com
SIGN.

SCALE NTS
DATE 09.09.2025
DEALT SAMI CHECKED VG
DRAWING TITLE
SUBMISSION DRAWING
FLOOR PLANS TOWER - D
DWG. NO. AS / TOD-2/ S-04