Building Plans Sanction and Plans will be valid for five year only.
To be read with Memo No. 1206
Dated 29/09/2025 TO 28/09/2030

Chairman Building Plan Committee cum
Senior Town Planner
HSIIDC, IMT Manesar

Recommended for Sanction
ATP
H. Dallan

FAR AREA OF GROUND FLOOR TOWER-D									
GROSS –B									
1	1	X	3.785	X	2.570	=	9.727		SQM
2	1	X	6.700	X	9.245	=	61.938		SQM
3	1	X	4.685	X	6.385	=	29.920		SQM
4	1	X	2.730	X	11.730	=	32.037		SQM
4A	1	X	0.180	X	0.065	=	0.010		SQM
5	0.5	X	2.855	X	1.625	=	2.320		SQM
7	1	X	3.235	X	3.195	=	10.320		SQM
8	0.5	X	1.395	X	0.625	=	0.417		SQM
9	1	X	0.145	X	0.100	=	0.022		SQM
10	1	X	0.240	X	0.910	=	0.220		SQM
11	1	X	1.010	X	0.320	=	0.323		SQM
12	1	X	1.100	X	0.525	=	0.578		SQM
14	0.5	X	0.885+0.715	X	1.600	=	1.280		SQM
15	1	X	0.600	X	0.170	=	0.102		SQM
16	1	X	0.320	X	1.625	=	0.520		SQM
17	1	X	0.820	X	0.170	=	0.139		SQM
18	1	X	0.990	X	0.915	=	0.906		SQM
19	1	X	1.725	X	0.775	=	1.345		SQM
20	1	X	1.825	X	4.790	=	8.742		SQM
21	1	X	1.695	X	0.365	=	0.618		SQM
22	1	X	0.325	X	0.875	=	0.284		SQM
23	0.5	X	4.880+1.030	X	2.960	=	8.629		SQM
24	0.5	X	1.695+1.300	X	1.745	=	4.028		SQM
25	1	X	0.790	X	3.045	=	2.956		SQM
26	1	X	0.790	X	0.325	=	0.256		SQM
27	1	X	1.285	X	2.545	=	3.270		SQM
29	0.5	X	2.755	X	1.435	=	1.977		SQM
30	1	X	3.725	X	7.110	=	26.485		SQM
31	1	X	1.925	X	1.960	=	3.709		SQM
33	0.5	X	8.520+7.390	X	3.070	=	24.422		SQM
34	0.5	X	1.640	X	0.955	=	0.781		SQM
35	1	X	1.430	X	0.910	=	1.301		SQM
36	1	X	0.320	X	2.535	=	0.811		SQM
37	1	X	0.575	X	0.845	=	0.486		SQM
38	0.5	X	0.790+0.920	X	1.785	=	1.531		SQM
39	1	X	3.325	X	8.355	=	27.780		SQM
40	1	X	0.445	X	1.770	=	0.788		SQM
41	1	X	0.320	X	0.545	=	0.174		SQM
42	0.5	X	1.700+1.840	X	2.795	=	4.795		SQM
					TOTAL	=	275.396		SQM

TOTAL FAR AREA GROUND FLOOR TOWER-D									
	=	GROSS-A	+	GROSS-B	-	GROSS-C	-	GROSS-D	
	=	275.396	+	0.064	-	2.411	-	15.914	
	=	263.135							

FAR AREA OF GROUND FLOOR TOWER-D																			
GROSS –B																			
5	3.14	X	3.210	X	3.210	X	62	/	360	-	0.5	X	3.210	-	0.450	X	3.285	=	1.039	SQM
13	3.14	X	1.175	X	1.175	X	86	/	360	-	0.5	X	1.175	-	0.320	X	1.605	=	0.348	SQM
28	3.14	X	3.625	X	3.625	X	86	/	360	-	0.5	X	3.625	-	0.980	X	4.055	=	1.304	SQM
32	3.14	X	2.455	X	2.455	X	83	/	360	-	0.5	X	2.455	-	0.825	X	3.270	=	1.371	SQM
																	TOTAL	=	4.062	SQM

DEDUCTION AREA CALCULATION OF GROUND FLOOR TOWER-D																				
GROSS – C																				
D1	3.14	X	1.280	X	1.280	X	70	/	360	-	0.5	X	1.280	-	0.235	X	1.475	=	0.230	SQM
D2	3.14	X	1.790	X	1.790	X	54	/	360	-	0.5	X	1.790	-	0.680	X	2.785	=	1.299	SQM
D3	3.14	X	3.350	X	3.350	X	57	/	360	-	0.5	X	3.350	-	0.405	X	3.160	=	0.882	SQM
																	TOTAL	=	2.411	SQM

DEDUCTION AREA OF TOWER-D									
GROSS –D									
D4	0.5	X	3.14	X	2.360	X	4.295	=	15.914	SQM
							TOTAL	=	15.914	SQM

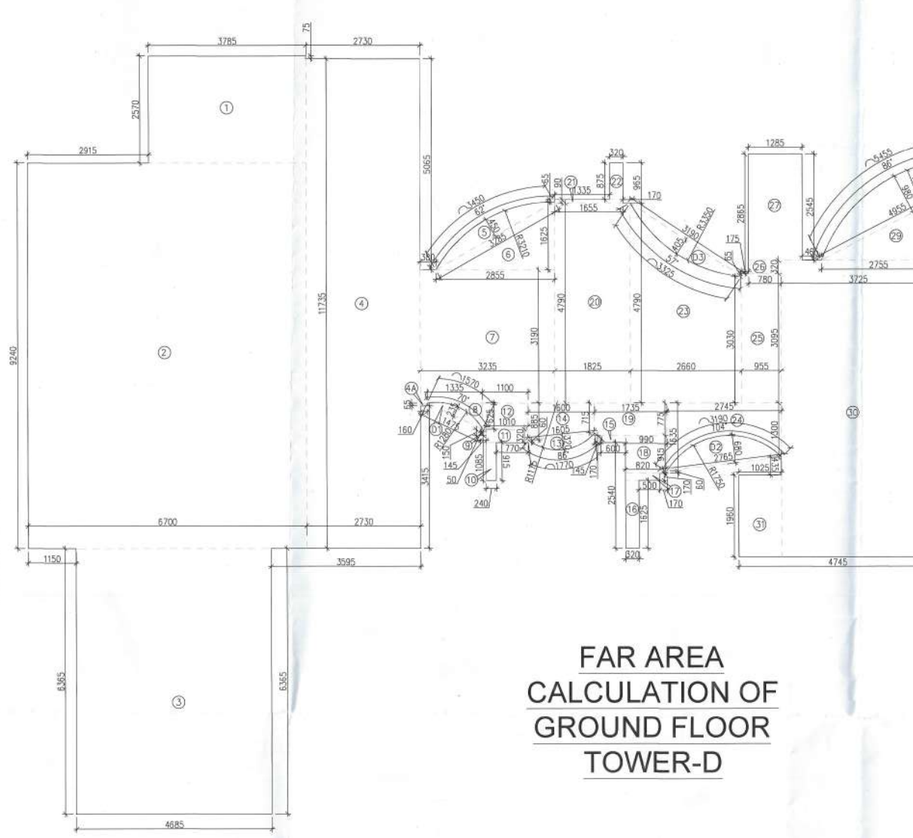

FAR AREA CALCULATION OF GROUND FLOOR TOWER-D

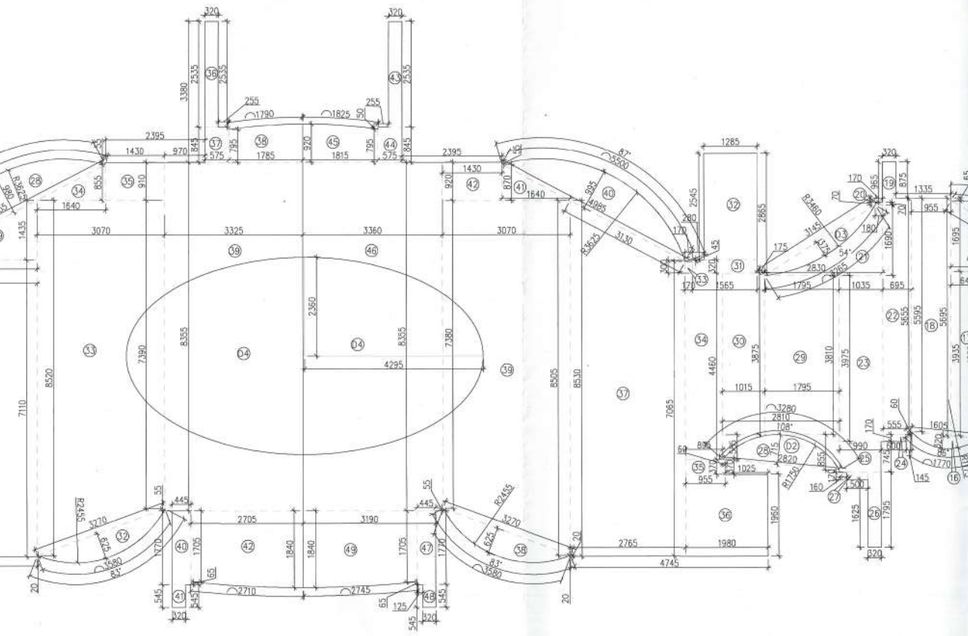

FAR AREA CALCULATION OF GROUND FLOOR TOWER-C

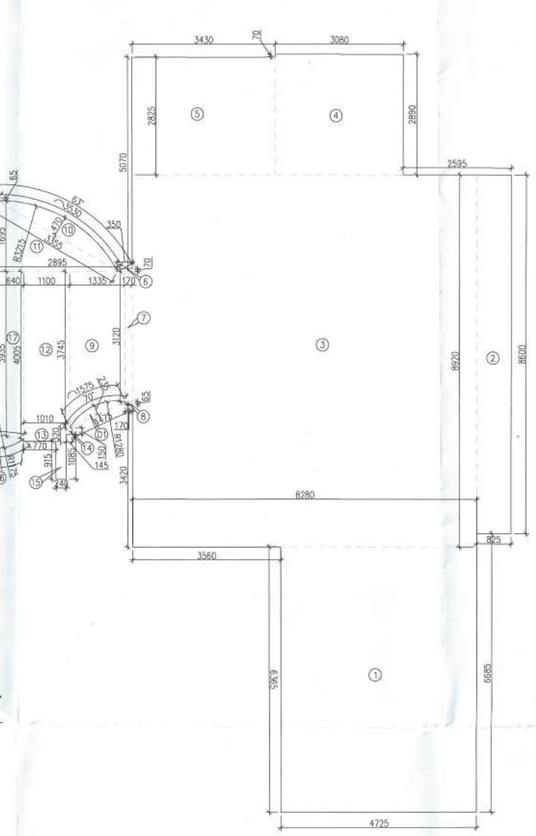

FAR AREA OF GROUND FLOOR TOWER-C									
GROSS –B									
1	1	X	4.725	X	6.365	=	30.075		SQM
2	1	X	9.825	X	8.880	=	87.266		SQM
3	1	X	8.380	X	8.925	=	73.958		SQM
4	1	X	3.680	X	2.695	=	9.917		SQM
5	1	X	3.430	X	2.825	=	9.688		SQM
6	1	X	0.350	X	0.070	=	0.025		SQM
7	1	X	0.170	X	3.120	=	0.530		SQM
8	1	X	0.170	X	0.065	=	0.011		SQM
9	0.5	X	3.520+3.740	X	1.555	=	4.582		SQM
11	0.5	X	2.860	X	1.095	=	1.564		SQM
12	1	X	1.010	X	0.320	=	0.323		SQM
13	1	X	1.010	X	0.325	=	0.328		SQM
14	1	X	0.145	X	0.150	=	0.022		SQM
15	1	X	0.240	X	0.915	=	0.220		SQM
16	1	X	0.320	X	1.625	=	0.520		SQM
17	0.5	X	4.005+3.905	X	0.640	=	2.541		SQM
18	0.5	X	5.595+5.695	X	0.955	=	5.391		SQM
19	1	X	0.320	X	0.875	=	0.280		SQM
20	1	X	0.170	X	0.070	=	0.012		SQM
21	0.5	X	0.160+2.820	X	1.660	=	2.540		SQM
22	1	X	1.695	X	3.685	=	6.245		SQM
23	1	X	0.820	X	0.170	=	0.139		SQM
24	1	X	0.350	X	0.170	=	0.064		SQM
25	1	X	0.990	X	0.745	=	0.738		SQM
26	1	X	0.320	X	1.795	=	0.574		SQM
27	1	X	0.530	X	0.170	=	0.090		SQM
28	0.5	X	0.850+0.585	X	2.810	=	2.023		SQM
29	1	X	1.790	X	3.810	=	6.820		SQM
30	1	X	1.015	X	3.675	=	3.503		SQM
31	1	X	1.985	X	0.320	=	0.501		SQM
32	1	X	1.285	X	2.545	=	3.270		SQM
33	1	X	0.170	X	0.350	=	0.061		SQM
34	1	X	0.695	X	4.480	=	3.060		SQM
35	1	X	0.985	X	0.375	=	0.369		SQM
36	1	X	1.980	X	1.980	=	3.881		SQM
37	0.5	X	7.095+8.530	X	2.765	=	21.990		SQM
38	0.5	X	8.520+7.390	X	3.070	=	24.383		SQM
41	0.5	X	1.640	X	0.870	=	0.713		SQM
42	1	X	1.430	X	0.535	=	1.316		SQM
43	1	X	0.320	X	2.535	=	0.811		SQM
44	1	X	0.575	X	0.845	=	0.486		SQM
45	0.5	X	0.920+0.795	X	1.815	=	1.550		SQM
46	1	X	1.380	X	8.355	=	28.073		SQM
47	1	X	0.445	X	1.770	=	0.788		SQM
48	1	X	0.320	X	0.545	=	0.174		SQM
49	0.5	X	1.640+1.705	X	3.195	=	5.664		SQM
					TOTAL	=	273.085		SQM

TOTAL FAR AREA GROUND FLOOR TOWER-C									
	=	GROSS-A	+	GROSS-B	-	GROSS-C	-	GROSS-D	
	=	273.085	+	8.212	-	2.443	-	15.914	
	=	263.941							

FAR AREA OF GROUND FLOOR TOWER-C																			
GROSS –B																			
10	3.14	X	3.215	X	3.215	X	83	/	360	-	0.5	X	3.215	-	0.470	X	3.355	=	1.075	SQM
37	3.14	X	1.175	X	1.175	X	86	/	360	-	0.5	X	1.175	-	0.320	X	1.605	=	0.348	SQM
38	3.14	X	2.455	X	2.455	X	83	/	360	-	0.5	X	2.455	-	0.925	X	3.270	=	1.371	SQM
40	3.14	X	3.625	X	3.625	X	87	/	360	-	0.5	X	1.625	-	0.995	X	4.055	=	2.418	SQM
																	TOTAL	=	6.212	SQM

DEDUCTION AREA CALCULATION OF GROUND FLOOR TOWER-C																				
GROSS – C																				
D1	3.14	X	1.280	X	1.280	X	70	/	360	-	0.5	X	1.280	-	0.235	X	1.475	=	0.230	SQM
D2	3.14	X	1.790	X	1.790	X	108	/	360	-	0.5	X	1.790	-	0.715	X	2.820	=	1.426	SQM
D3	3.14	X	3.460	X	3.460	X	54	/	360	-	0.5	X	3.460	-	0.375	X	3.145	=	0.787	SQM
																	TOTAL	=	2.443	SQM

DEDUCTION AREA OF TOWER-C									
GROSS –D									
D4	0.5	X	3.14	X	4.295	X	2.360	=	15.914	SQM
							TOTAL	=	15.914	SQM

GROUND COVERAGE																			
GROSS –A					ADDITION														
S1	1	X	2.030			X	5.335	=	10.816	SQM									
S2	1	X	5.870			X	7.475	=	43.489	SQM									
S3	1	X	3.675			X	5.505	=	20.231	SQM									
S4	1	X	3.030			X	2.185	=	6.571	SQM									
S5	1	X	0.180			X	0.320	=	0.058	SQM									
S6	1	X	1.295			X	0.360	=	0.466	SQM									
S7	1	X	1.715			X	0.910	=	1.561	SQM									
S8	1	X	3.585			X	6.425	=	23.034	SQM									
S9	1	X	1.940			X	1.240	=	2.406	SQM									
S10	1	X	4.725			X	2.435	=	11.505	SQM									
S11	1	X	7.840			X	16.945	=	132.966	SQM									
S12	1	X	1.860			X	0.955	=	1.776	SQM									
S13	1	X	7.695			X	4.365	=	33.580	SQM									
S14	1	X	1.225			X	0.445	=	0.545	SQM									
S15	1	X	4.945			X	0.765	=	3.784	SQM									
S16	1	X	9.530			X	0.500	=	5.765	SQM									
S17	1	X	4.350			X	0.765	=	3.328	SQM									
S18	1	X	2.725			X	4.095	=	11.132	SQM									
S19	1	X	12.815			X	5.885	=	74.238	SQM									
S20	1	X	3.975			X	0.705	=	2.802	SQM									
S21	1	X	0.175			X	0.460	=	0.081	SQM									
S22	1	X	6.875			X	0.700	=	4.813	SQM									
S23	1	X	4.880			X	1.680	=	8.198	SQM									
S24	1	X	2.320			X	11.910	=	27.623	SQM									
S25	1	X	40.205			X	17.355	=	697.748	SQM									
S26	0.5	X	40.205		40.095	X	6.365	=	255.934	SQM									
S28	1	X	4.725			X	6.365	=	30.075	SQM									
S29	1	X	0.825			X	8.600	=	7.095	SQM									
S30	1	X	6.880			X	8.920	=	52.262	SQM									
S31	1	X	5.210			X	2.990	=	15.997	SQM									
S32	1	X	43.470			X	2.430	=	105.632	SQM									
							TOTAL	=	1306.522	SQM									
TOTAL GROUND COVERAGE		=	GROSS –A	+	GROSS – B	-	GROSS – C												
		=	1306.522	+	259.717	-	31.828												
		=	1534.411	SQM															

GROUND COVERAGE																			
GROSS – B																			
S27	3.14	X	49.630	X	49.630	X	48	/	360	-	0.5	X	49.630	-	4.230	X	40.095	=	114.202	SQM
S33	3.14	X	49.570	X	49.570	X	52	/	360	-	0.5	X	49.570	-	4.990	X	43.355	=	145.515	SQM
																	TOTAL	=	259.717	SQM

GROSS – C																			
					DEDUCTION AREA														
D1	1	X	3.140	X	4.295	X	2.360	=	31.828	SQM									
							TOTAL	=	31.828	SQM									

TOTAL GROUND COVERAGE=
1534.411+33.681+33.681=1601.772 SQ.MT

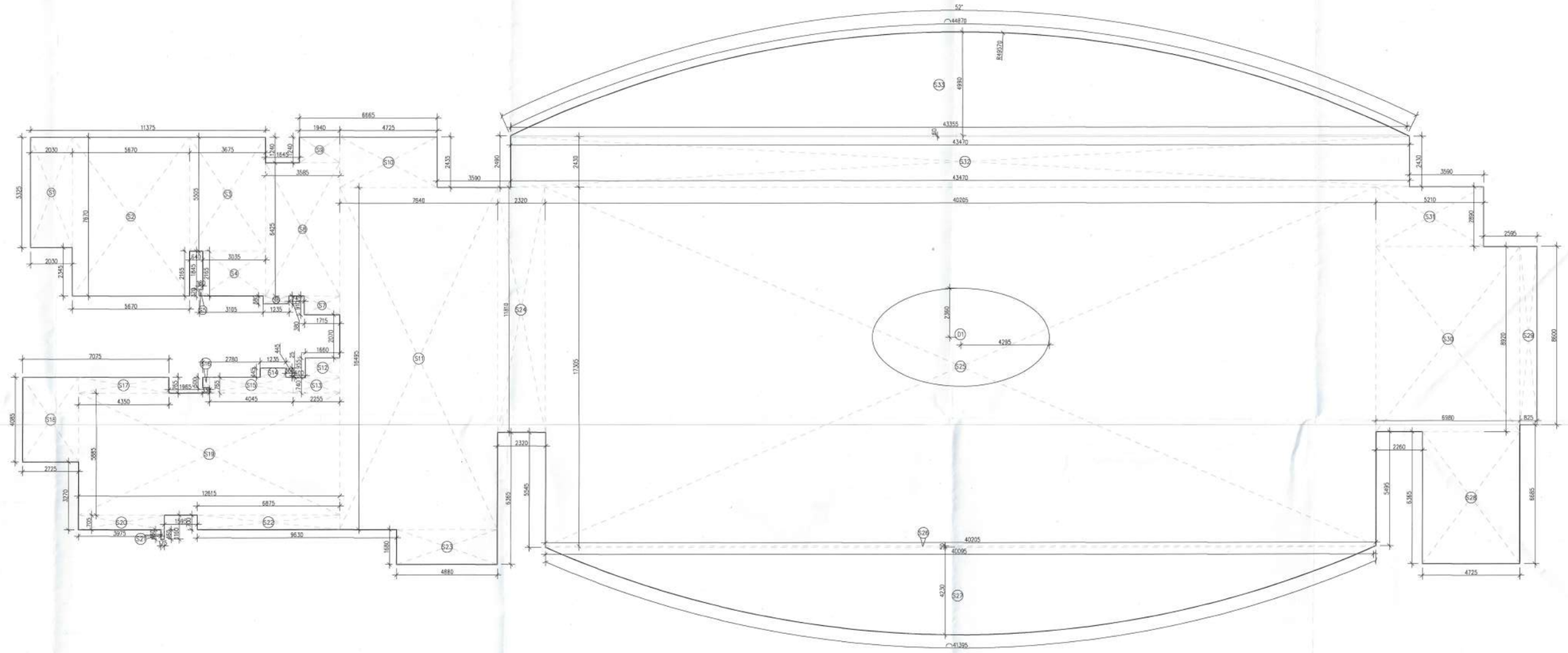

AREA CALCULATION OF GROUND COVERAGE

18TH & 27TH FLOOR REFUGE AREA TOWER-D									
GROSS – A									
R1	=	1	X	2.515	X	4.365	=	10.978	SQM
R2	=	1	X	2.140	X	0.320	=	0.685	SQM
R3	=	1	X	2.540	X	4.125	=	10.478	SQM
R4	=	1	X	4.720	X	2.445	=	11.540	SQM
					TOTAL		=	33.681	SQM
GROSS AREA OF 17TH &19 FLOOR			=	652.443	SQM				
GROSS AREA OF 26TH & 28TH FLOOR			=	652.443					
			=	1304.886	SQM				
REFUGE AREA REQUIRED		=	(1304.886X0.3)/12.5	+	ADDITIONAL SPACE TO ACCOMMODATE WHEEL CHAIR SPACE @0.9 SQM PER 200 POPULATION				
		=	31.317	+	0.9				
		=	32.217	SQM					
REFUGE AREA PROVIDED		=	GROSS – A						
		=	33.681	SQM					

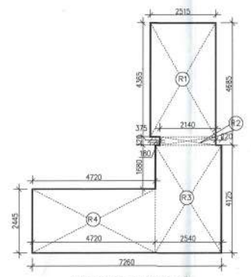

18TH & 27TH REFUGE AREA CALCULATION TOWER-D

18TH & 27TH FLOOR REFUGE AREA TOWER-C									
GROSS – A									
R1	=	1	X	2.515	X	4.365	=	10.978	SQM
R2	=	1	X	2.140	X	0.320	=	0.685	SQM
R3	=	1	X	2.540	X	4.125	=	10.478	SQM
R4	=	1	X	4.720	X	2.445	=	11.540	SQM
					TOTAL		=	33.681	SQM
GROSS AREA OF 17TH &19TH FLOOR			=	663.280	SQM				
GROSS AREA OF 26TH &28TH FLOOR			=	663.280					
			=	1326.560	SQM				
REFUGE AREA REQUIRED		=	(1326.560X0.3)/12.5	+	ADDITIONAL SPACE TO ACCOMMODATE WHEEL CHAIR SPACE @0.9 SQM PER 200 POPULATION				
		=	31.837	+	0.9				
		=	32.737	SQM					
REFUGE AREA PROVIDED		=	GROSS – A						
		=	33.681	SQM					

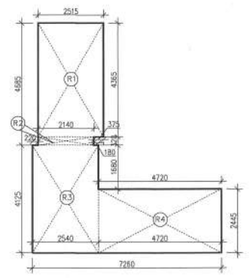

18TH & 27TH REFUGE AREA CALCULATION TOWER-C

1. BUILDING HAS AUTOMATIC SPRINKLER SYSTEM WHEREVER REQUIRED BY NBC.
2. BUILDING WILL BE DESIGNED (STRUCTURES) AS PER RELEVENT IS CODES FOR EARTH QUAKE RESISTANCE.
3. POWER BACKUP/ MECHANICAL VENTILATED SHAFTS.

PROPOSED BUILDING PLAN FOR PHASE-2 & 2A OF GROUP HOUSING SITE PLOT NO. GH-03 SITUATED AT SECTOR-80, MANESAR AREA ADMEASURING 22501 SQMTS BEING DEVELOPED BY CONSCIENT INFRASTRUCTURE PVT. LTD.

ASSOCIATE ARCHITECTS

GG ASSOCIATES

PLOT NO-408 SEC-37C GURGAON(PH-9560794794)

OWNER'S SEAL & SIGNATURE

ARCHITECT'S SEAL & SIGNATURE

Ar. Rajinder Kumar
CA/2012/...71
Mob.: 9671004573

SEP.-2025 | Scale -1:100

Drawing Title:- GROUND FLOOR FAR AREA & GROUND COVERAGE

Drawing No:- GF-02