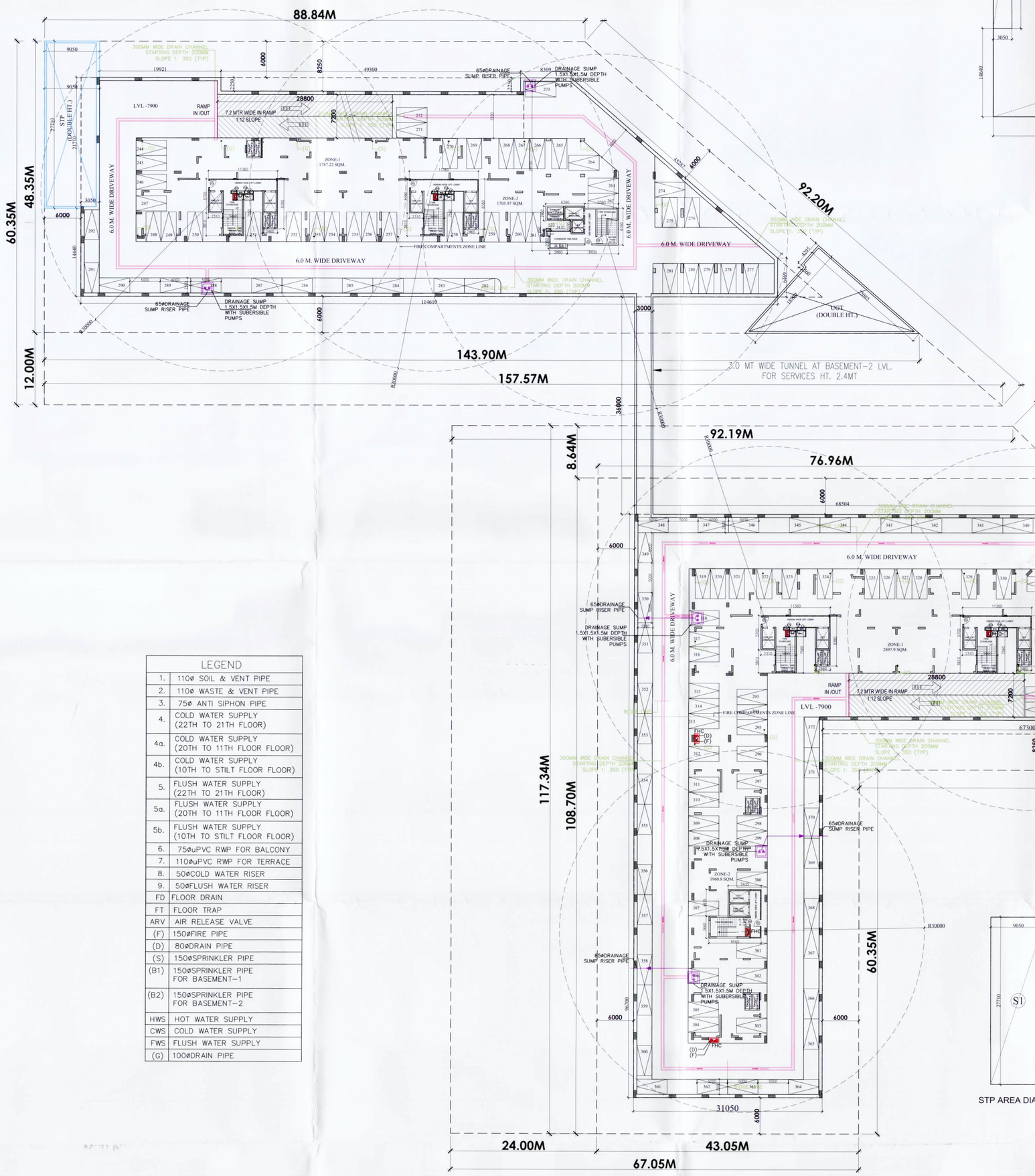

BASEMENT-2: FLOOR PLAN

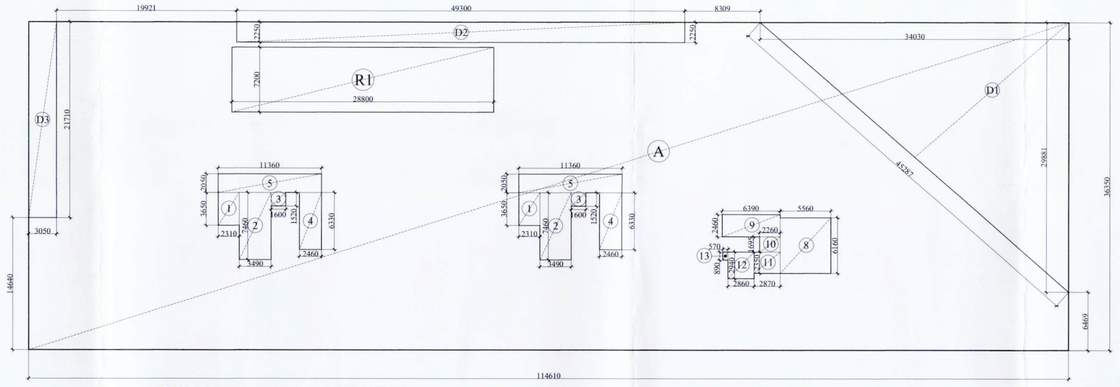

BASEMENT-2 (PART A): AREA DIAGRAM

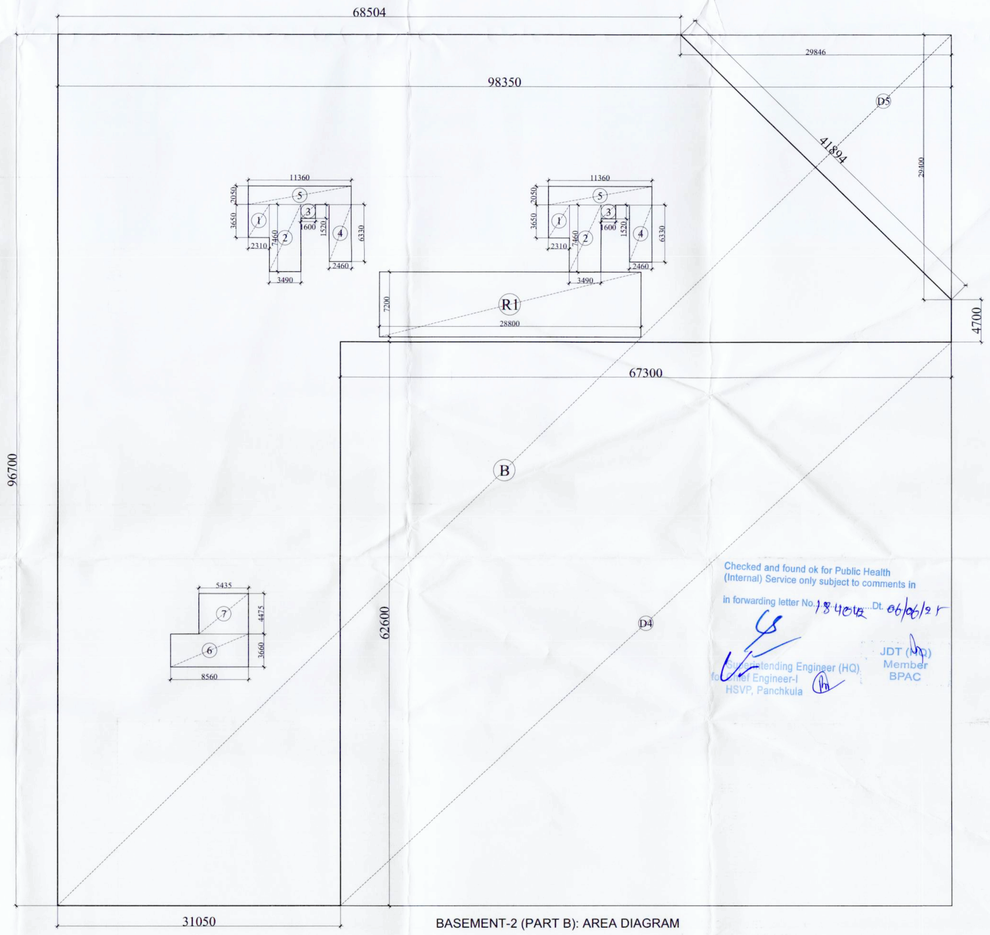

BASEMENT-2 (PART B): AREA DIAGRAM

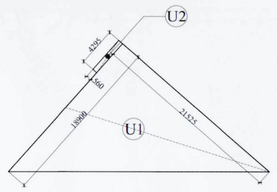

UGT AREA DIAGRAM

STP AREA DIAGRAM

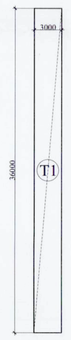

TUNNEL AREA DIAGRAM

LEGEND	
1.	110ø SOIL & VENT PIPE
2.	110ø WASTE & VENT PIPE
3.	75ø ANTI SIPHON PIPE
4.	COLD WATER SUPPLY (22TH TO 21TH FLOOR)
4a.	COLD WATER SUPPLY (20TH TO 11TH FLOOR FLOOR)
4b.	COLD WATER SUPPLY (10TH TO STILT FLOOR FLOOR)
5.	FLUSH WATER SUPPLY (22TH TO 21TH FLOOR)
5a.	FLUSH WATER SUPPLY (20TH TO 11TH FLOOR FLOOR)
5b.	FLUSH WATER SUPPLY (10TH TO STILT FLOOR FLOOR)
6.	75øuPVC RWP FOR BALCONY
7.	110øuPVC RWP FOR TERRACE
8.	50øCOLD WATER RISER
9.	50øFLUSH WATER RISER
FD	FLOOR DRAIN
FT	FLOOR TRAP
ARV	AIR RELEASE VALVE
(F)	150øFIRE PIPE
(D)	80øDRAIN PIPE
(S)	150øSPRINKLER PIPE
(B1)	150øSPRINKLER PIPE FOR BASEMENT-1
(B2)	150øSPRINKLER PIPE FOR BASEMENT-2
HWS	HOT WATER SUPPLY
CWS	COLD WATER SUPPLY
FWS	FLUSH WATER SUPPLY
(G)	100øDRAIN PIPE

SERVICES AREA									
ITEM	L	X	B	X	FACTOR	X	NO	=	SQ.MT
S1	9.050	x	27.710	x	1.0	x	1	=	250.776
U1	18.900	x	21.525	x	0.5	x	1	=	203.411
U2	4.295	x	0.560	x	1.0	x	1	=	2.405
T1	3.000	x	36.000	x	1.0	x	1	=	108.000
					TOTAL			=	564.592

TOTAL BUILTUP AREA FOR BASEMENT-2 (A+B+S(SRVICES))	=	8903.829

BASEMENT -2									
(AREAS IN sq mtrs.)									
ADDITIONS									
ITEM	L	X	B	X	FACTOR	X	NO	=	SQ.MT
A	114.610	x	36.350	x	1.0	x	1	=	4166.074
					TOTAL			=	4166.074
DEDUCTIONS									
ITEM	L	X	B	X	FACTOR	X	NO	=	SQ.MT
D1	34.030	x	29.881	x	0.5	x	1		508.425
D2	49.300	x	2.250	x	1.0	x	1		110.925
D3	3.050	x	21.710	x	1.0	x	1	=	66.216
					TOTAL			=	685.566
BUILTUP AREA FOR BASEMENT-2 (A) (ADDITIONS-DEDUCTIONS)								=	3480.508
ADDITIONS									
ITEM	L	X	B	X	FACTOR	X	NO	=	SQ.MT
B	98.350	x	96.700	x	1.0	x	1	=	9510.445
					TOTAL			=	9510.445
DEDUCTIONS									
ITEM	L	X	B	X	FACTOR	X	NO	=	SQ.MT
D4	67.300	x	62.600	x	1.0	x	1	=	4212.980
D5	29.846	x	29.400	x	0.5	x	1		438.736
					TOTAL			=	4651.716
BUILTUP AREA FOR BASEMENT-2 (B) (ADDITIONS-DEDUCTIONS)								=	4858.729
TOTAL BUILTUP AREA FOR BASEMENT-2 (A+B)								=	8339.237
CORE AREA									
ITEM	L	X	B	X	FACTOR	X	NO	=	SQ.MT
1	2.310	x	3.650	x	1.0	x	4	=	33.726
2	3.490	x	7.460	x	1.0	x	4	=	104.142
3	1.600	x	1.520	x	1.0	x	4	=	9.728
4	2.460	x	3.650	x	1.0	x	4	=	35.916
5	11.360	x	2.050	x	1.0	x	4	=	93.152
6	8.560	x	3.660	x	1.0	x	1	=	31.330
7	5.435	x	4.475	x	1.0	x	1	=	24.322
8	5.560	x	6.160	x	1.0	x	1	=	34.250
9	6.390	x	2.460	x	1.0	x	1	=	15.719
10	2.260	x	1.665	x	1.0	x	1	=	3.831
11	2.870	x	2.350	x	1.0	x	1	=	6.745
12	2.860	x	2.940	x	1.0	x	1	=	8.408
13	0.570	x	0.890	x	1.0	x	1	=	0.507
R1	28.800	x	7.200	x	1.0	x	2	=	414.720
					TOTAL			=	816.495
RCC WALL AREA									
ITEM	L	X	B	X	FACTOR	X	NO	=	SQ.MT
1	285.690	x	0.550	x	1.0	x	1	=	157.130
2	370.640	x	0.550	x	1.0	x	1	=	203.852
					TOTAL			=	360.982
TOTAL BASEMENT-2 PARKING AREA (TOTAL BUILTUP-CORE-RCC WALL AREA)								=	7161.760

TOTAL PARKING AREA OF BASEMENT-2	=	7161.760
TOTAL CAR PARKING @ 32 ECS	=	223.805
TOTAL CAR PARKING @ BAY PROVIDED	=	129

NOTE :
BACK TO BACK PARKING FOR SINGLE UNIT OWNER.
IT IS NOT COUNTED IN NO. OF CARS & BAYS.

OWNER :
ARTTECH ELEGENT HOMES LLP.

PROJECT :
PROPOSED BUILDING PLAN OF RETIREMENT HOUSING COLONY OVER AN AREA MEASURING 4.525 ACRES (LICENSE No- 16 OF 2025 DATED 30-01-2025) IN SECTOR -89A, GURUGRAM MANESAR URBAN COMPLEX BEING DEVELOPED BY ARTTECH ELEGENT HOMES LLP.

ARCHITECTURAL CONSULTANT
NIRMAN
ARCHITECTS & INTERIOR DESIGNERS
e-mail : nirmanarchitects@yahoo.com
I-8 , 1st FLOOR , SECTOR-10, D.L.F.
PH. : 9811204088, 9810081088

NORTH

TITLE
BASEMENT-2: FLOOR PLAN & AREA CALCULATION

SCALE - 1:300	DRG.NO.- 04
ARCHITECT'S SIGN	OWNER'S SIGN
KAPIL MANGLA B.ARCH CA/2001/27088	For ARTTECH ELEGANT HOMES LLP Partner

S.T.P.(HQ) Member Secretary B.P.A.C. — S.T.P.(G) Member B.P.A.C. — C.T.P.(HR) Chairman B.P.A.C.
DTP(HQ) — ATP(HQ) — Ram Avtar Bassi JD(HQ)
JD. — PA. — A.T.P.

SANCTIONED
TO BE READ WITH THIS OFFICE MEMO NO.
DAT.

Checked and found ok for Public Health (Internal) Service only subject to comments in
In forwarding letter No. 13 40102 Dt. 06/06/25
Executive Engineer (HQ) / Engineer-I HSVP, Panchkula
JDT (HQ) Member BPAC