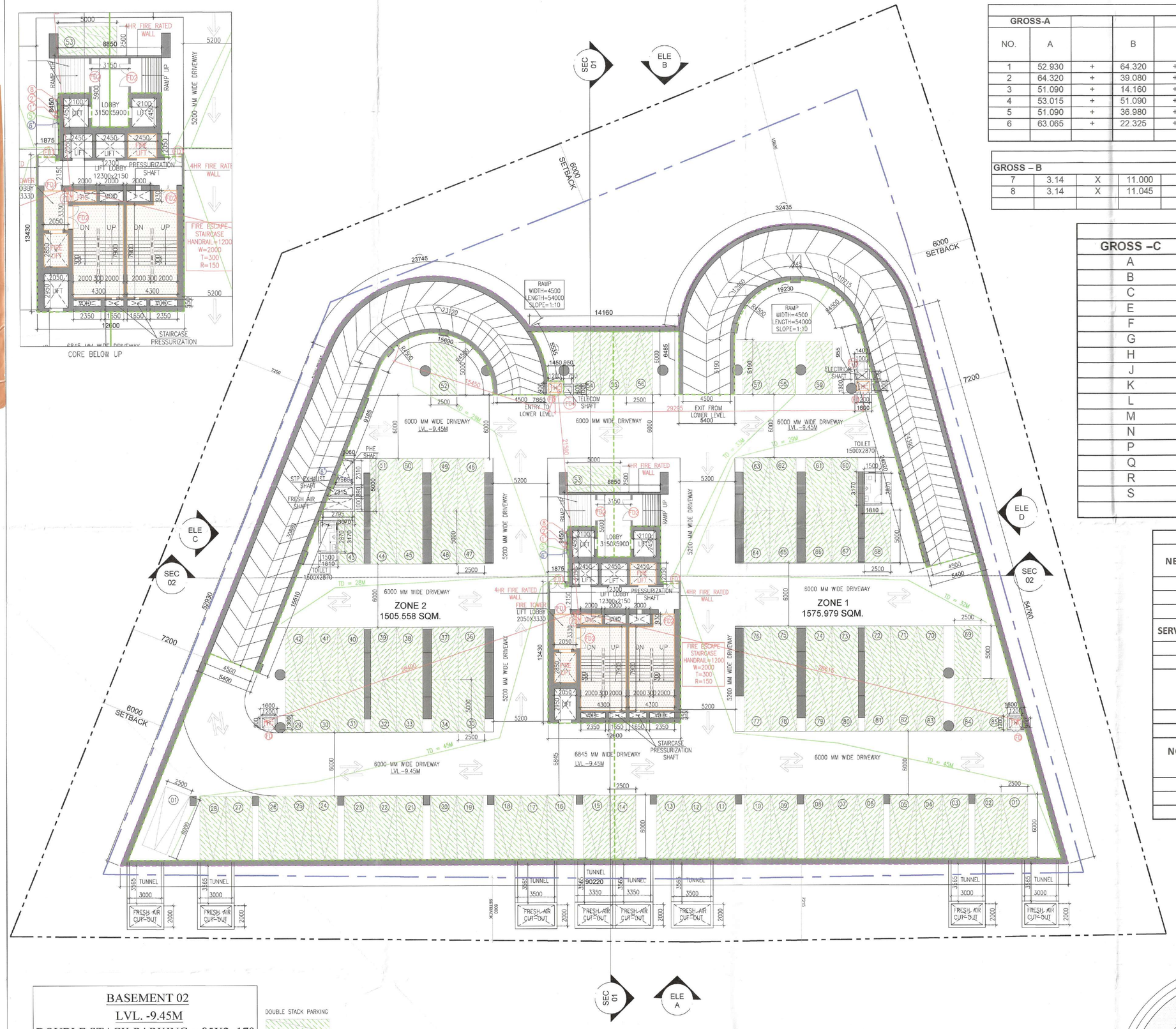

BASEMENT 02
LVL. -9.45M
DOUBLE STACK PARKING = 85X2=170
SINGLE CAR PARKING = 1
TOTAL NO OF PARKING =171

DOUBLE STACK PARKING

LEGEND:- PLUMBING

1	110Ø WASTE PIPE	
1'	160Ø WASTE PIPE	
2	110Ø SOIL PIPE	
2'	160Ø SOIL PIPE	
3	63Ø VENT PIPE	
4	160Ø RAIN WATER PIPE FROM TERRACE	
4'	100Ø TERRACE RAIN WATER TANK TO U.G SUMP	
5	DOMESTIC WATER PIPE	
6	FLUSHING WATER PIPE	
7	110Ø BALCONY RAIN WATER PIPE	
8	100Ø KITCHEN WASTE PIPE	
9	160Ø LANDSCAPE DRAIN PIPE/ TERRACE	
9'	160Ø TERRACE RAIN WATER TANK OVERFLOW PIPE	

LEGEND S.NO.	DOOR TAG	DOOR WIDTH (mm)	LOCATION
1	FD	930	FHC
2	FD'	1050	WASTE STORAGE AREA
3	FD1	1500	LIFT LOBBY,OWC
4	FD1'	1200	SERVER ROOM
5	FD2	2000	STAIRCASE
6	FD3	760	TOILET,MAINTENACESV ROOM
7	FD4	600	TELECOM SHAFT
8	FD5	750	ELECTRICAL SHAFT
9	SLD	3630	LOBBY
10	SLD1	3000	LOBBY

AREA CALCULATION OF BASEMENT-02

GROSS-A												
NO.	A		B		C				s	AREA OF = S(S-A)(S-B)(S-C)	Area	
1	52.930	+	64.320	+	19.430	/	2	=	68.34	207062.441	455.041	SQM
2	64.320	+	39.080	+	51.090	/	2	=	77.245	996600.086	998.299	SQM
3	51.090	+	14.160	+	53.015	/	2	=	59.1325	130839.332	361.717	SQM
4	53.015	+	51.090	+	14.160	/	2	=	59.1325	130839.332	361.717	SQM
5	51.090	+	36.980	+	63.065	/	2	=	75.5675	892371.352	944.654	SQM
6	63.065	+	22.325	+	54.760	/	2	=	70.075	359229.093	599.357	SQM
									TOTAL	=	3720.785	SQM

AREA CALCULATION OF BASEMENT-02

GROSS – B																			
7	3.14	X	11.000	X	11.000	X	159	/	360	-	0.5	X	11.000	-	8.875	X	22.325	=	144.604	SQM
8	3.14	X	11.045	X	11.045	X	123	/	360	-	0.5	X	11.045	-	5.790	X	19.430	=	79.825	SQM
																	TOTAL	=	224.428	SQM

SERVICE AREA CALCULATION OF BASEMENT-02

GROSS –C										
A	1	X	1.600			X	1.300	=	2.080	SQM
B	1	X	12.600			X	13.430	=	169.218	SQM
C	1	X	8.850			X	8.450	=	74.783	SQM
E	1	X	1.600			X	1.300	=	2.080	SQM
F	1	X	1.810			X	3.170	=	5.738	SQM
G	1	X	1.600			X	1.300	=	2.080	SQM
H	1	X	1.400			X	0.955	=	1.337	SQM
J	1	X	5.400			X	24.020	=	129.708	SQM
K	1	X	5.400			X	23.985	=	129.519	SQM
L	1	X	5.400			X	5.190	=	28.026	SQM
M	1	X	0.950			X	1.000	=	0.950	SQM
N	1	X	1.450			X	1.300	=	1.885	SQM
P	1	X	5.400			X	22.200	=	119.880	SQM
Q	1	X	5.400			X	31.045	=	167.643	SQM
R	0.5	X	3.070	+	1.060	X	5.000	=	10.325	SQM
S	1	X	1.810			X	3.170	=	5.738	SQM
							TOTAL	=	850.989	SQM

NET AREA OF BASEMENT -02	=	GROSS – A	+	GROSS – B				
	=	3720.785	+	224.428				
	=	GROSS –1	=	3945.214	SQM			
SERVICE AREA OF BASEMENT-02	=	GROSS – C						
	=	850.989	SQM					
	=	GROSS –2	=	850.989				
NET PARKING AREA OF BASEMENT-2		GROSS-1	-	GROSS –2				
	=	3945.214	-	850.989				
		TOTAL	=	3094.225	SQM			
NO. OF ECS ACHIEVABLE OF BASEMENT-02			=	3094.225	/	20		
			=	155	ECS			
		NO OF BAYS	=	171	BAYS			

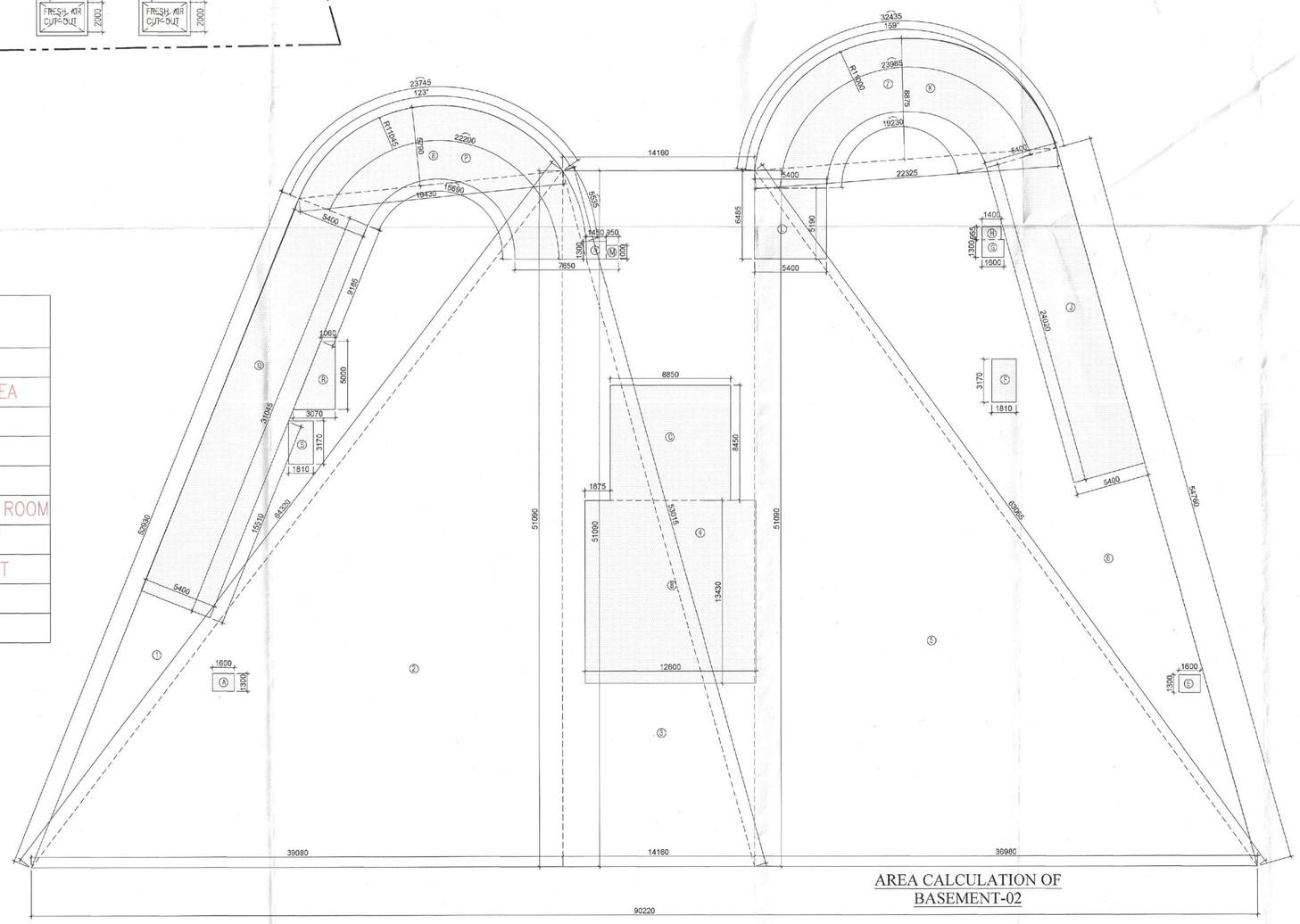

AREA CALCULATION OF BASEMENT-02

S.T.P.(NQ) Member Secretary B.P.A.C. — S.T.P.(G) Member B.P.A.C. — C.T.P.(HR) Chairman B.P.A.C. — DTP(HQ) — ATP(HQ) — AD — PA — ATP — JCT (T) MEMBER BPAC — Rajesh Dutt SD(HQ)

SANCTIONED
TO BE READ WITH THIS OFFICE MEMO NO.: 37-945
DATED: 30/09/2025

NOTES:-
ALL BUILDING MECHANICAL VENTILATED & 100% POWER BACKUP.
AIR CONDITIONING SYSTEM IS BEING PROVIDED.
DG POWER BACKUP IS BEING PROVIDED.
TOILET ARE MECHANICAL VENTILATED.
ALL LIFTS SHALL HAVE POWER BACK-UP.
ALL ELECTRICAL INSTALLATION SHELL BE AS PER PROVISION OF RELEVANT CODE.
FIRE/FIGHTING/SAFETY PROVISIONS WILL BE AS PER RELEVANT CODE PROVISIONS.
BASEMENT AREA SHALL HAVE MECHANICALLY VENTILATED AS PER RELEVANT CODE.
ALL TOILETS ARE VENTILATED AS PER HARYANA BUILDING CODE 2017.
BUILDINGS HAS AUTOMATIC SPRINKLER SYSTEM WHEREVER REQUIRED BY RELEVANT CODE.
BUILDING WILL BE DESIGNED(STRUCTURES)AS PER RELEVANT I.S.CODES FOR EARTHQUAKE RESISTANCE.
SOLAR PANELS OF REQUIRED CAPACITY SHALL BE PROVIDED AS PER HARE DA/ZONING NORMS.
ALL HANDICAP RAMPS WITH RAILING.
ALL FIRE FIGHTING INSTALLATIONS SHALL BE AS PER PROVISION OF RELEVANT CODE.
THE RAINWATER HARVESTING SYSTEM SHALL BE PROVIDED AS PER CENTRAL GROUND WATER AUTHORITY NORMS.

PROJECT:

PROPOSED BUILDING PLAN OF COMMERCIAL COLONY AN AREA MEASURING 2.03 ACRES (LICENCE NO.162.OF 2022 DATED 6/10/2022) IN SECTOR-106,GURUGRAM MANESAR URBAN COMPLEX BEING DEVELOPED BY SOBHA COMMERCIAL PRIVATE LTD (FORMARLY KNOWN AS BNB BUILDERS PVT. LTD.) IN COLLABORATION WITH SH. AMIT YADAV & OTHERS

ASSOCIATE ARCHITECTS

GG ASSOCIATES
PLOT NO-408 SEC-37C GURGAON (Mob.:- 9873794794)

Checked and found ok for Public Health (Internal) Service only subject to comments in forwarding letter No. 2673-75 Dt. 14/10/25
Superintending Engineer(HQ)
for Chief Engineer

OWNER'S SEAL & SIGNATURE

SOBHA COMMERCIAL PVT. LTD.
Regd. Office: 'SOBHA DEVON', Plot No. 138 P, Sector-44, Gurugram-122002, Haryana

ARCHITECT'S SEAL & SIGNATURE

Ar. AJAY KUMAR BAWA
COA REGD. NO. CA/2001-20001
SOBHA LIMITED
5th Floor Rider House, Plot No. 138 P, Sector-44, Gurugram-122002, Haryana
Phone :- 0124-4685555

MARCH -2025	Scale : 1:.200	
Drawing Title:- BASEMENT -02 PLAN & AREA CALCULATION		Drawing No:- BS-02