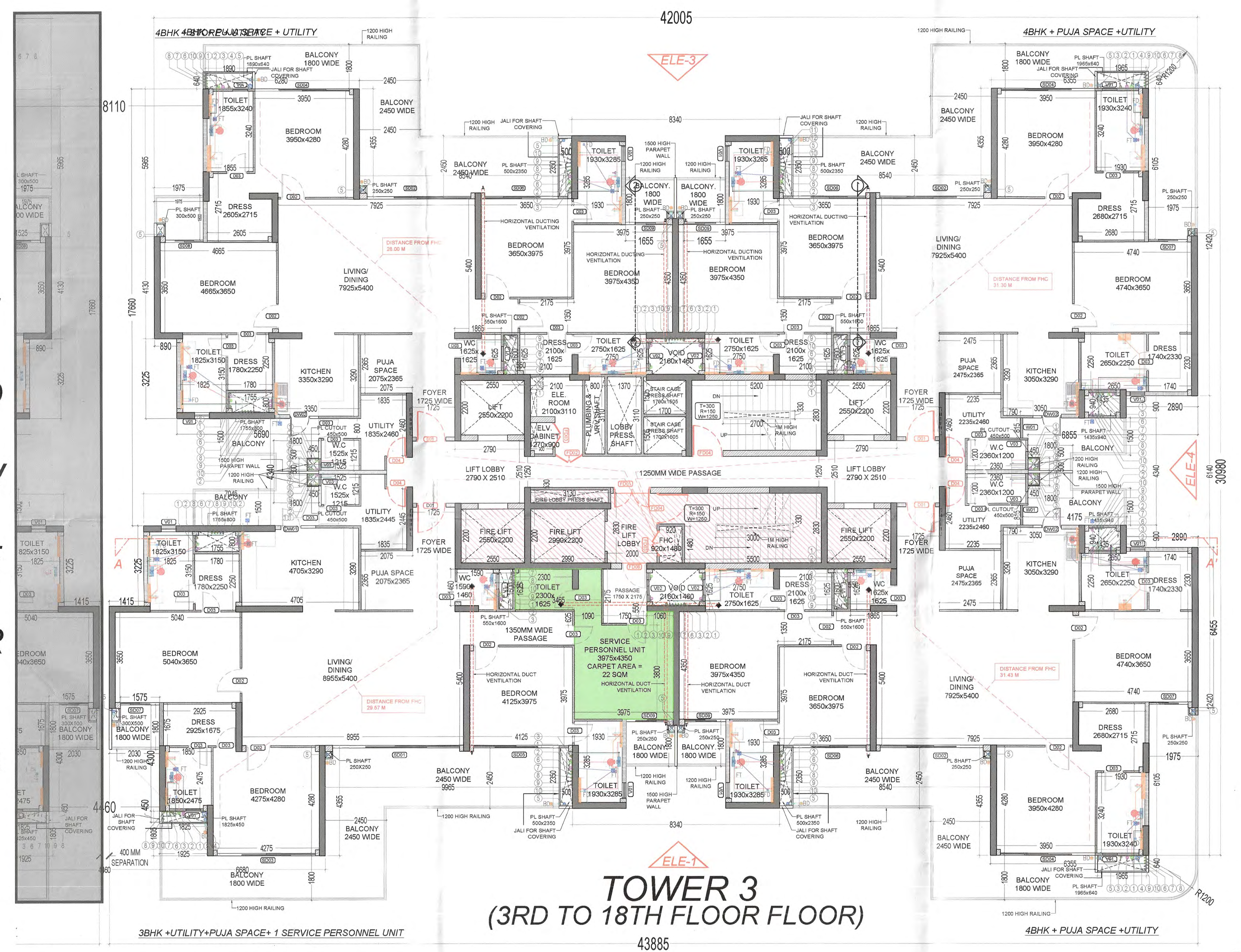
T O W E R 4
42005
43885
8110
ELE-1
ELE-2
ELE-3
ELE-4
4BHK + PUJA SPACE +UTILITY
3BHK +UTILITY+PUJA SPACE+ 1 SERVICE PERSONNEL UNIT
SERVICE PERSONNEL UNIT 3975x4350 CARPET AREA = 22 SQM
1250MM WIDE PASSAGE
1350MM WIDE PASSAGE
LIFT LOBBY 2790 X 2510
FIRE LIFT 2550x2200
R1200

TOWER 3
(3RD TO 18TH FLOOR FLOOR)

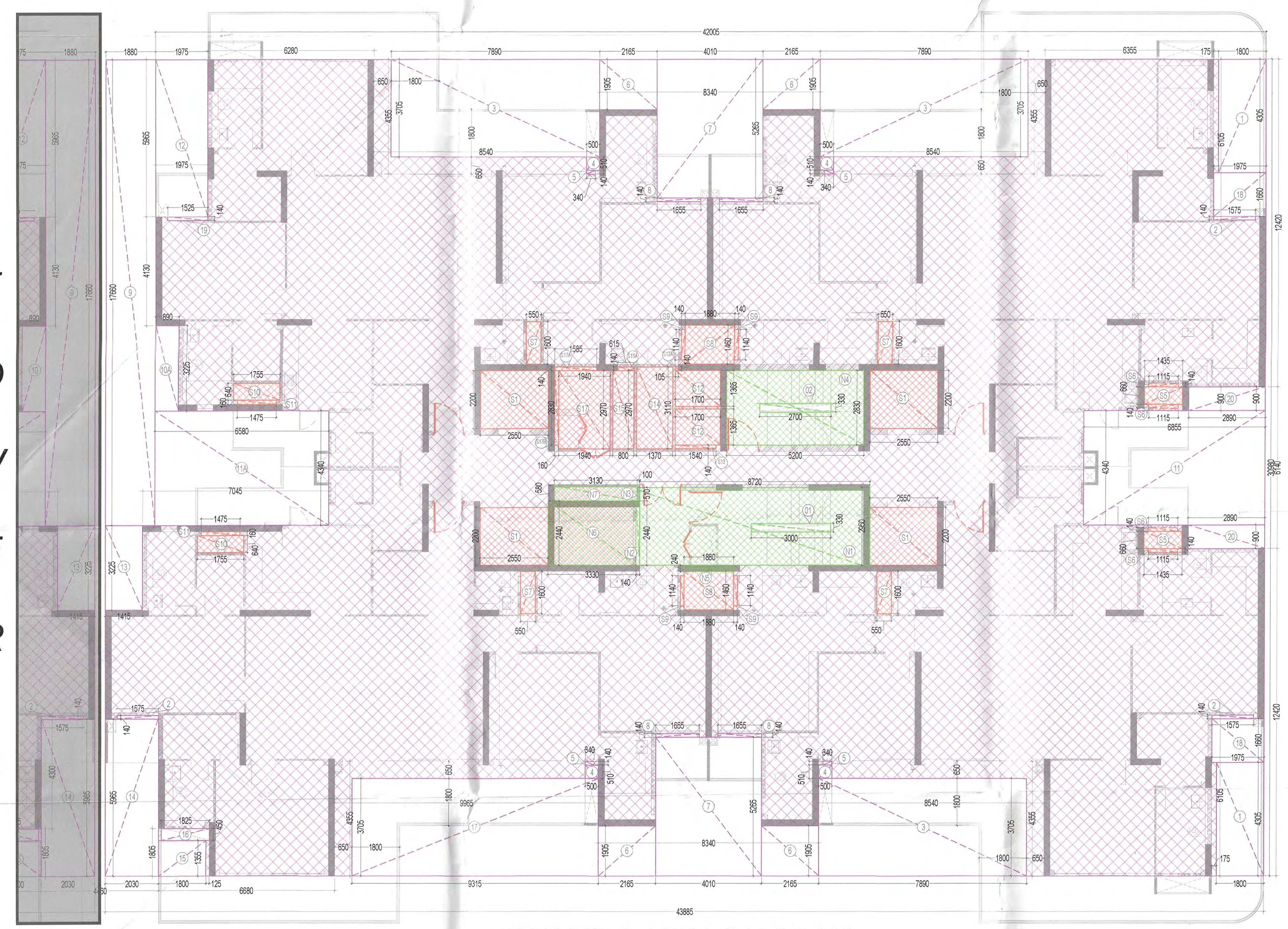

TOWER 3 AREA DIAGRAM
(3RD TO 18TH FLOOR PLAN)

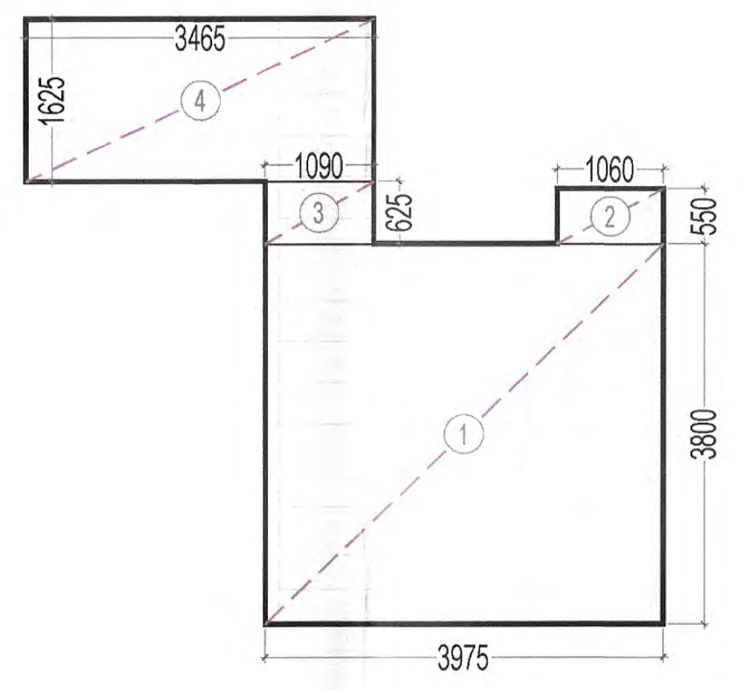

TOWER 3
SERVICE PERSONNEL UNIT
CARPET AREA DIAGRAM

SERVICE PERSONNEL UNIT CARPET AREA				
TAG	LENGTH (L) in Mts	WIDTH (W) in Mts	NO.S (N)	AREA (L x W x N)
1	3.975	3.800	1	15.105
2	1.060	0.550	1	0.583
3	1.090	0.625	1	0.681
4	3.465	1.625	1	5.631
TOTAL (B)				22.000

FAR AREA OF TOWER- 3 & 5 AT SECOND FLOOR / TYPICAL FLOOR LEVEL				
TAG	LENGTH (L) in Mts	WIDTH (W) in Mts	NO.S (N)	AREA (L x W x N)
A	43.885	30.98	1	1359.557
TOTAL (A)				1359.557
DEDUCTIONS				
TAG	LENGTH (L) in Mts	WIDTH (W) in Mts	NO.S (N)	AREA (L x W x N)
1	1.800	4.305	2	15.498
2	0.140	1.575	3	0.662
3	7.890	3.705	3	87.697
4	0.500	0.510	4	1.020
5	0.340	0.140	4	0.190
6	2.165	1.905	4	16.497
7	4.010	5.265	2	42.225
8	1.655	0.140	4	0.927
9	1.880	17.660	1	33.201
10A	0.890	3.225	1	2.870
11	6.855	4.340	1	29.751
11A	6.580	4.340	1	28.557
12	1.975	5.965	1	11.781
13	1.415	3.225	1	4.563
14	2.030	5.965	1	12.109
15	1.800	1.355	1	2.439
16	1.825	0.450	1	0.821
17	9.315	3.705	1	34.512
18	1.975	1.660	2	6.557
19	1.525	0.140	1	0.214
20	2.890	0.900	2	5.202
TOTAL (D)				337.294
LIFT & SERVICES SHAFTS				
TAG	LENGTH (L) in Mts	WIDTH (W) in Mts	NO.S (N)	AREA (L x W x N)
S1	2.550	2.200	4	22.440
S5	1.435	0.660	2	1.894
S6	1.115	0.140	4	0.624
S7	0.550	1.600	4	3.520
S8	1.880	1.460	2	5.490
S9	0.140	1.140	4	0.638
S10	1.755	0.640	2	2.246
S12	1.700	1.365	2	4.641
S12A	0.105	0.140	1	0.015
S13	1.540	0.140	1	0.216
S14	3.110	1.370	1	4.261
S15	2.970	0.800	1	2.376
S15A	0.615	0.140	1	0.086
S17	1.940	2.970	1	5.762
S17A	1.585	0.140	1	0.222
S17B	2.830	0.160	1	0.453
TOTAL (S)				54.884
FIRE STAIRCASE & NON FAR AREA				
TAG	LENGTH (L) in Mts	WIDTH (W) in Mts	NO.S (N)	AREA (L x W x N)
N1	8.720	2.950	1	25.724
N2	2.440	0.140	1	0.342
N3	0.510	0.100	1	0.051
N4	5.200	2.830	1	14.716
N5	1.880	0.240	1	0.451
N6	3.330	2.440	1	8.125
N7	3.130	0.580	1	1.815
TOTAL (N)				51.224
FIRE STAIRCASE WELL				
O1	3.000	0.330	1	0.990
O2	2.700	0.330	1	0.891
TOTAL (W)				1.881
TOTAL NON FAR AREA (NF) = (N - W)				49.343
TOTAL FAR AREA (F) = (A - D - S - N)				916.156
TOTAL COVERED AREA = (F + NF)				965.499

LEGEND:- PLUMBING

No.	Item
1	100Ø SOIL PIPE
2	100Ø WASTE PIPE
3	75Ø VENT PIPE
4	150Ø RAIN WATER PIPE FROM TERRACE
5	100Ø RAIN WATER PIPE FROM BALCONY
6	DOMESTIC WATER DOWN TAKE TOP 3-FLOOR HYDRO SUPPLY
7	DOMESTIC WATER DOWN TAKE (LEFT 25TH FLOOR TO 15TH FLOOR)
8	DOMESTIC WATER DOWN TAKE (LEFT 14 FLOOR TO GROUND/STILT FLOOR)
9	FLUSHING WATER DOWN TAKE (TOP 28TH FLOOR TO 16TH FLOOR)
10	FLUSHING WATER DOWN TAKE (LEFT 15TH FLOOR TO GROUND/STILT FLOOR)
11	DOMESTIC WATER RISER PIPE
12	FLUSHING WATER RISER PIPE

- PIPE SUPPORT
- W.C CISTERN
- HEALTH FAUCET
- GEYSER
- ⊠ BUTTERFLY VALVE
- PIPE DROP
- FLOOR TRAP
- FLOOR DRAIN
- ⊠ FLOOR TRAP CUTOUT 150X150MM
- ⊠ WC CUTOUT 150X150MM
- HOT WATER SUPPLY PIPE
- KHURRA SIZE 450X450
- SUNKEN FOR TOILET 100MM
- SUNKEN FOR BALCONY 75 MM

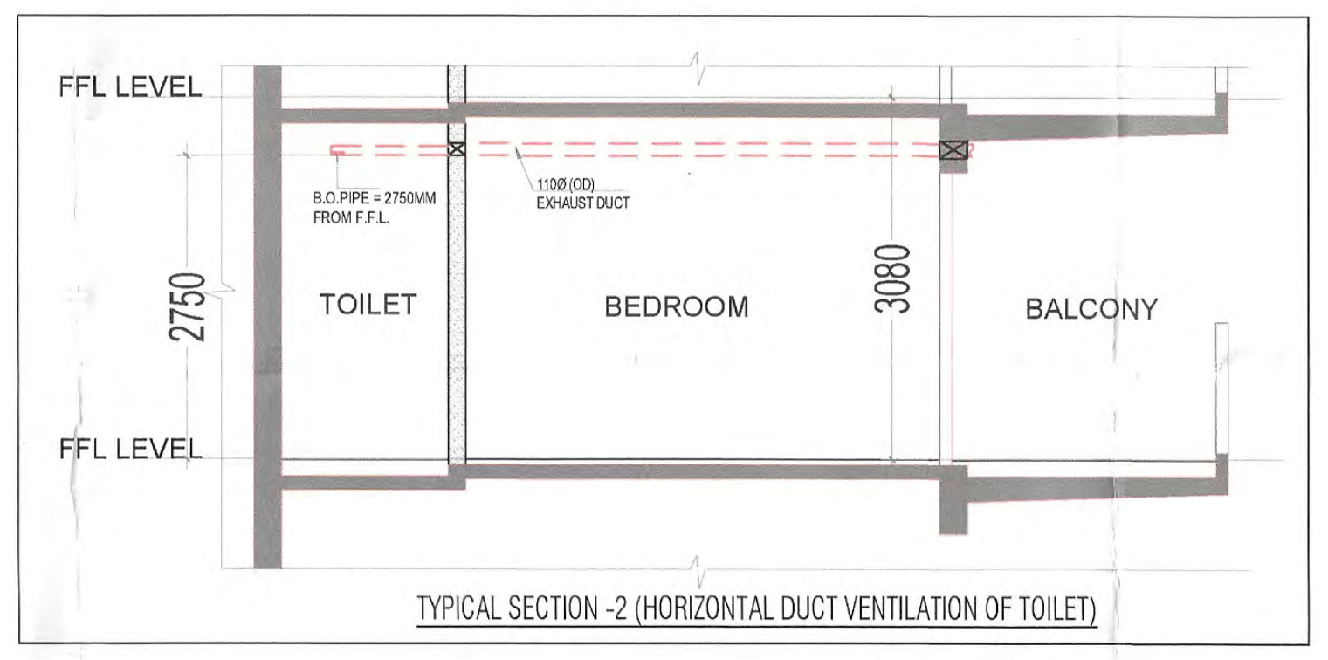

TYPICAL SECTION -2 (HORIZONTAL DUCT VENTILATION OF TOILET)

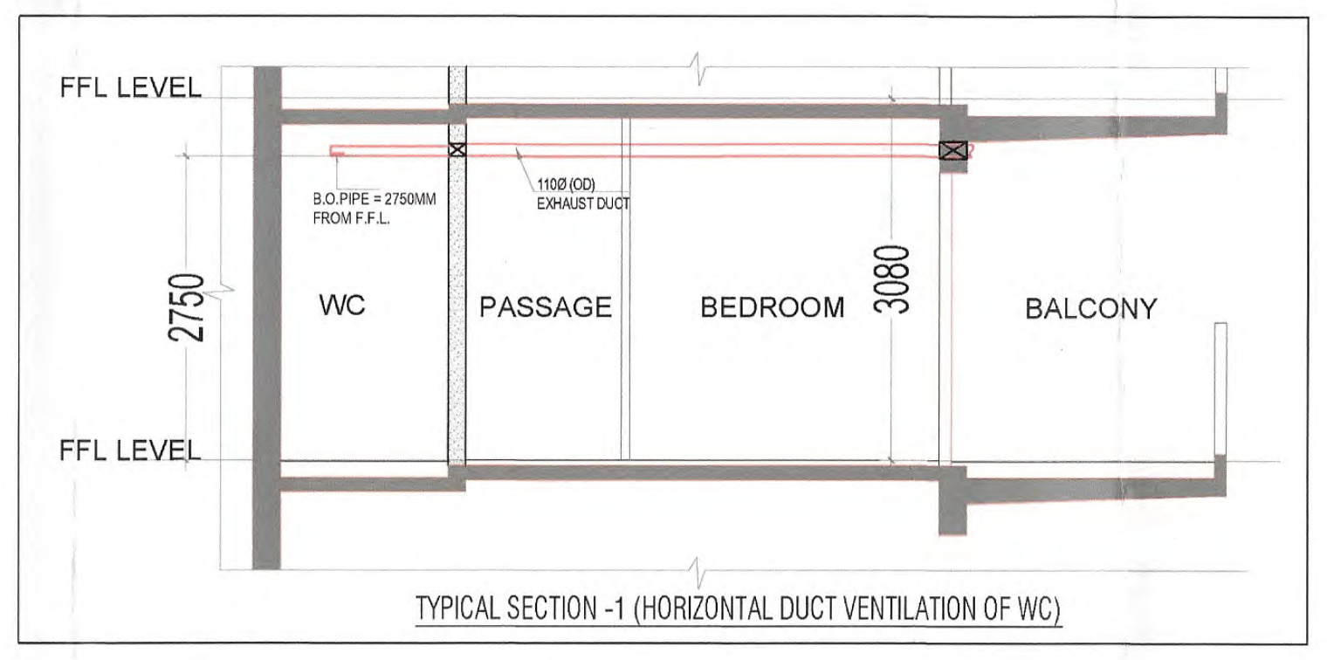

TYPICAL SECTION -1 (HORIZONTAL DUCT VENTILATION OF WC)

SUMMARY OF MECHANICAL VENTILATION											
S/N	Floor	Area SFT	Effective HT FT	Volume CFT	Air Change Per Hour	Calculated CFM	Installed CFM	Application	Nos. of Fan & Fan Capacity CFM	Type of Fan	Remark
	General Ventilation										
1	Toilet For Bedroom - Typical	47	9	423	6	42	100	Exhaust	1x100 CFM	Inline Fan	Normal Mode
2	Toilet For Bedroom - Typical	28	9	252	6	25	100	Exhaust	1x100 CFM	Inline Fan	Normal Mode

LEGEND:-

1. COLUMN / STRUCTURAL WALL
2. 240 MM THK NON STRUCTURAL WALL
3. 160MM THK NON STRUCTURAL WALL
4. 100MM THK NON STRUCTURAL WALL
5. 75MM THK NON STRUCTURAL WALL
6. 200MM THK BLOCKWORK

LEGEND

- FAR AREA
- NON FAR AREA
- SERVICE AREA
- SHAFT AREA UNDER DEDUCTION
- FIRE TENDER PATH
- - - - - - - TOWER LINE

DOOR & WINDOW SCHEDULE					
S.NO.	SYMBOL	SIZE	CILL LVL	LINTEL LVL	REMARKS
1	SD01	5140X2430	-	2430	UPVC/SD
2	SD02	4190X2430	-	2430	UPVC/SD
3	SD03	3955X2430	-	2430	UPVC/SD
4	SD04	3790X2430	-	2430	UPVC/SD
5	SD05	3415X2430	-	2430	UPVC/SD
6	SD06	2940X2430	-	2430	UPVC/SD
7	SD07	1575X2430	-	2430	UPVC/SD
8	SD08	1525X2430	-	2430	UPVC/SD
9	SD09	1425X2430	-	2430	UPVC/SD
10	GL01	1500X2750	-	2750	GLASS DOOR
11	GL02	1250X2750	-	2750	GLASS DOOR
12	GL03	2000X2750	-	2750	GLASS DOOR
13	FD01	1500X2430	-	2430	ONE HOUR FIRE RATED DOOR
14	FD01A	1500X2750	-	2750	ONE HOUR FIRE RATED DOOR
15	FD02	1200X2650	100	2750	ONE HOUR FIRE RATED DOOR
16	FD03	1000X2330	100	2430	ONE HOUR FIRE RATED DOOR
17	FD04	1250X2430	-	2430	ONE HOUR FIRE RATED DOOR
18	FD04A	1250X2750	-	2750	ONE HOUR FIRE RATED DOOR
19	FD05	900X2750	-	2750	ONE HOUR FIRE RATED DOOR
20	D01	1200X2430	-	2430	ONE HOUR FIRE RATED DOOR
21	D02	1000x2250	-	2250	WD/FLUSH DOOR
22	D03	800X2250	-	2250	WD/FLUSH DOOR
23	D04	800X2430	-	2430	ONE HOUR FIRE RATED DOOR
24	D04A	800X2750	-	2750	WD/FLUSH DOOR
25	D05	1000X2750	-	2750	WD/FLUSH DOOR
26	D05A	1050X2750	-	2750	WD/FLUSH DOOR
27	D06	1250X2750	-	2750	WD/FLUSH DOOR
28	D07	815X2250	-	2250	WD/FLUSH DOOR
29	V01	600X1200	1050	2250	UPVC
30	V02	600X1200	600	2250	UPVC
31	V03	500X1200	1050	2250	UPVC
31	DW1	800/600 (1400)	0/1050	2250	UPVC/OP
32	DW2	800X350 (1150)	0/1050	2250	UPVC/OP
33	W01	815X1200	1050	2250	UPVC/OP
34	W02	600X1200	1050	2250	UPVC/OP
REMARKS	WD/FD = WOODEN FLUSH DOOR UPVC/SD = UPVC/ SLIDING UPVC/OP = UPVC/ OPENABLE				

Hslam S.T.P.(HQ) Member Secretary B.P.A.C.

S.T.P.(G) Member B.P.A.C.

C.T.P.(HR) Chairman B.P.A.C.

DTP(HQ)

ATP(HQ)

AD

PA

ATP

Rajesh Dutt SD(HQ)

SANCTIONED
TO BE READ WITH THIS OFFICE
MEMO NO.: 35995
DATED: 12/09/25

Note :-

1. BUILDING HAS AUTOMATIC SPRINKLER SYSTEM WHEREVER REQUIRED BY NBC.
2. BUILDING WILL BE DESIGNED (STRUCTURES) AS PER RELEVANT IS CODES FOR EARTH QUAKE RESISTANCE.
3. 100% POWER BACKUP/ MECHANICAL VENTILATED SHAFTS.

PHASE - 1 ALREADY SANCTIONED VIDE DATES: 25.01.2023 AND MEMO NO.- 2350

THIS IS SUBMISSION FOR PHASE-2 ONLY WITHOUT ANY CHANGE IN PHASE - 1.

GROUND FLOOR (COMMUNITY) - MECHANICALLY VENTILATED FLOOR AND WITH 100% POWER BACKUP

PROJECT:

PROPOSED BUILDING PLAN OF PHASE 2 GROUP HOUSING COLONY (MIX LAND USE) UNDER TOD ZONE FOR(90% GH COMPONENT AND 10% COMMERCIAL COMPONENT) ON THE AREA MEASURING 15.99375 ACRES (LICENCE NO 213 OF 2022 DATED 27/12/22) IN REVENUE ESTATE OF VILLAGE CHAUMA, IN SECTOR 111 GURUGRAM HARYANA BEING DEVELOPED BY METRO EDUCATION AND WELFARE PVT. LTD

OWNER

METRO EDUCATION AND WELFARE PVT. LTD

ARCHITECTS

STUDIO SYMBIOSIS
India | Germany | UK
INDIA
D-79, Sector 48, Delhi- NCR
U.P. 201301, Noida
TEL: +91 0120 4226979
E-MAIL:
info@studio-symbiosis.com
www.studio-symbiosis.com

GERMANY
Hainbuchenweg 38
71229 Stuttgart | Leonberg

STUDIO SYMBIOSIS

SUBMISSION DRAWING

Metro Education & Welfare Pvt. Ltd.
Authorised Signatory

OWNER'S SEAL
& SIGNATURE

ARCHITECT'S SEAL
& SIGNATURE

AMIT GUPTA
Architect
CA/2004/33147

DATE:- JULY 2025

Scale :- 1:100

Drawing No:- SD/AR/M3M-111-PH2/T-03/103A

Drawing Title:-

Checked and found ok for Public Health (Internal) Service only subject to comments in forwarding letter No. 27416 ... Dt. 20/8/25

TOWER 3 TYPICAL FLOOR PLAN 1
SERVICE PERSONNEL UNIT (3RD TO 18TH FLOOR)

Superintending Engineer (HQ)
or Chief Engineer-I
HSVP, Panchkula

JDA(T)
MEMBER
BPAC